## EROSION CONTROL

| | | * |
|---|---|---|
| IP | INLET PROTECTION | 3.07 |
| SF | SILT FENCE | 3.05 |
| CE | CONSTRUCTION ENTRANCE | 3.02 |
| CIP | CULVERT INLET PROTECTION | 3.08 |

* VIRGINIA EROSION & SEDIMENT CONTROL HANDBOOK SPECIFICATION NUMBER

## SOILS INFORMATION

THE SOILS FOR THIS AREA CONSIST OF 2 TO 7 FEET OF EXISTING FILL MATERIAL CONSISTING OF MEDIUM DENSE TO DENSE CLAYEY FINE SAND WITH CRUSHED STONE FRAGMENTS, AND MEDIUM STIFF TO VERY STIFF FINE SANDY CLAY. BENEATH THE EXISTING FILL MATERIAL, THE SOILS ARE MAINLY MEDIUM DENSE TO VERY LOOSE CLAYEY/SILTY FINE TO MEDIUM SAND.

## EROSION CONTROL NARRATIVE

1. THE OWNER IS REQUIRED TO GIVE THE COUNTY INSPECTOR 48 HOURS NOTIFICATION TO SCHEDULE AN ON-SITE PRE-CONSTRUCTION MEETING FOR THE ISSUANCE OF A LAND DISTURBANCE PERMIT.
2. INSTALL CONSTRUCTION ENTRANCE, AND SILT FENCE AS PER PLANS.
3. BEGIN ROUGH GRADING OF ROADS.
4. INSTALL UTILITIES AND STORM SEWER AS PER PLAN.
5. INSTALL INLET PROTECTION AS PER PLAN.
6. INSTALL CHECK DAMS AS PER PLAN.
7. FINE GRADE ROADS.
8. SEED DENUDED AREAS AS SOON AS POSSIBLE AND MULCH ALL DISTURBED AREAS.
9. CONTINUAL MAINTENANCE PRACTICES SHALL BE PERFORMED TO ENSURE PROTECTION OF DOWNSTREAM PROPERTIES.
10. NO EROSION CONTROL DEVICE SHALL BE REMOVED UNTIL AN ADEQUATE STAND OF GRASS HAS BEEN OBTAINED.

NOTE:
ALL EROSION AND SEDIMENT CONTROL MEASURES SHOWN ON THE PLAN ARE TO BE CONSTRUCTED, MAINTAINED, AND REMOVE IN ACCORDANCE WITH THE CURRENT EDITION OF THE VIRGINIA EROSION AND SEDIMENT CONTROL HANDBOOK.

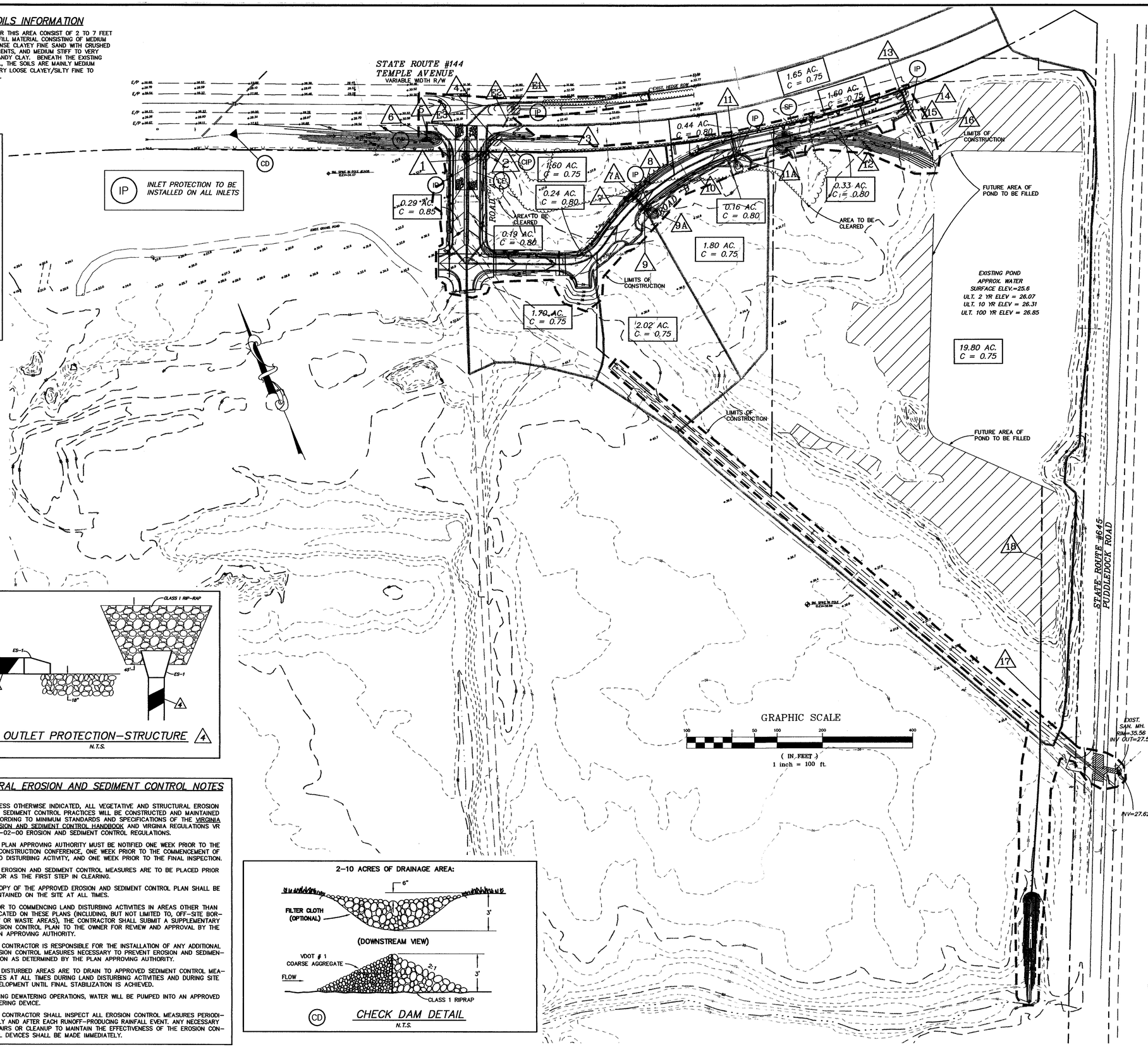


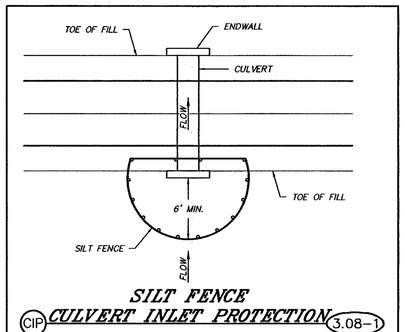


CIP SILT FENCE CULVERT INLET PROTECTION 3.08-1
NO SCALE

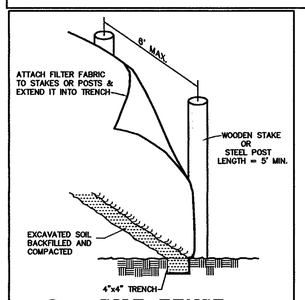


SF SILT FENCE (WITHOUT WIRE SUPPORT)
NO SCALE
SOURCE: VIRGINIA EROSION AND SEDIMENT CONTROL HANDBOOK, 1993, 3RD ED. PLATE: 3.05-2

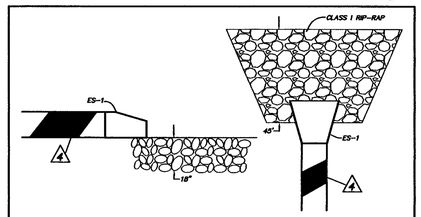


OP OUTLET PROTECTION-STRUCTURE 4
N.T.S.

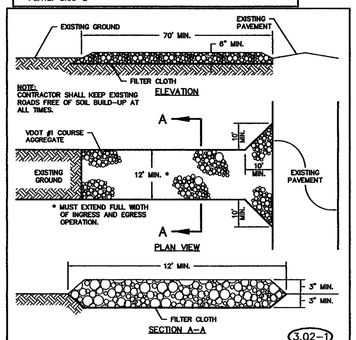


CE STONE CONSTRUCTION ENTRANCE 3.02-1
NO SCALE
SOURCE: VIRGINIA EROSION AND SEDIMENT CONTROL HANDBOOK, 3RD ED., 1993 PLATE: 3.02-1

## GENERAL EROSION AND SEDIMENT CONTROL NOTES

1. UNLESS OTHERWISE INDICATED, ALL VEGETATIVE AND STRUCTURAL EROSION AND SEDIMENT CONTROL PRACTICES WILL BE CONSTRUCTED AND MAINTAINED ACCORDING TO MINIMUM STANDARDS AND SPECIFICATIONS OF THE VIRGINIA EROSION AND SEDIMENT CONTROL HANDBOOK AND VIRGINIA REGULATIONS VR 625-02-00 EROSION AND SEDIMENT CONTROL REGULATIONS.
2. THE PLAN APPROVING AUTHORITY MUST BE NOTIFIED ONE WEEK PRIOR TO THE PRECONSTRUCTION CONFERENCE, ONE WEEK PRIOR TO THE COMMENCEMENT OF LAND DISTURBING ACTIVITY, AND ONE WEEK PRIOR TO THE FINAL INSPECTION.
3. ALL EROSION AND SEDIMENT CONTROL MEASURES ARE TO BE PLACED PRIOR TO OR AS THE FIRST STEP IN CLEARING.
4. A COPY OF THE APPROVED EROSION AND SEDIMENT CONTROL PLAN SHALL BE MAINTAINED ON THE SITE AT ALL TIMES.
5. PRIOR TO COMMENCING LAND DISTURBING ACTIVITIES IN AREAS OTHER THAN INDICATED ON THESE PLANS (INCLUDING, BUT NOT LIMITED TO, OFF-SITE BORROW OR WASTE AREAS), THE CONTRACTOR SHALL SUBMIT A SUPPLEMENTARY EROSION CONTROL PLAN TO THE OWNER FOR REVIEW AND APPROVAL BY THE PLAN APPROVING AUTHORITY.
6. THE CONTRACTOR IS RESPONSIBLE FOR THE INSTALLATION OF ANY ADDITIONAL EROSION CONTROL MEASURES NECESSARY TO PREVENT EROSION AND SEDIMENTATION AS DETERMINED BY THE PLAN APPROVING AUTHORITY.
7. ALL DISTURBED AREAS ARE TO DRAIN TO APPROVED SEDIMENT CONTROL MEASURES AT ALL TIMES DURING LAND DISTURBING ACTIVITIES AND DURING SITE DEVELOPMENT UNTIL FINAL STABILIZATION IS ACHIEVED.
8. DURING DEWATERING OPERATIONS, WATER WILL BE PUMPED INTO AN APPROVED FILTERING DEVICE.
9. THE CONTRACTOR SHALL INSPECT ALL EROSION CONTROL MEASURES PERIODICALLY AND AFTER EACH RUNOFF-PRODUCING RAINFALL EVENT. ANY NECESSARY REPAIRS OR CLEANUP TO MAINTAIN THE EFFECTIVENESS OF THE EROSION CONTROL DEVICES SHALL BE MADE IMMEDIATELY.




CD CHECK DAM DETAIL
N.T.S.

THIS DRAWING PREPARED AT THE PRINCE GEORGE COUNTY OFFICE

COMMONWEALTH OF VIRGINIA
DERRICK A. JOHNSON
No. 24761
3-8-02
PROFESSIONAL ENGINEER


PRINCE GEORGE COUNTY OFFICE
4400 DUPONT BOULEVARD, SUITE 1
PRINCE GEORGE, VA 23875-1455
Telephone: 804-458-8683
Fax: 804-458-0399 Bus.
e-mail: timmons3@timmons.com

CORPORATE OFFICE
711 W. COURTHOUSE ROAD
RICHMOND, VA 23235-4099
Telephone: 804-794-3500
Fax: 804-794-1018
Web Site: www.timmons.com

OTHER BRANCH OFFICES
Hampton Roads, VA • 757-565-7300
Hanover County, VA • 804-559-4320
Fredericksburg, VA • 540-891-4010
Greensboro, NC • 336-662-0411


| DATE | COUNTY COMMENTS |
|---|---|
| 1-22-02 | COUNTY AND OWNER REVISIONS |
| 2-25-02 | COUNTY REVISIONS |
| 3-8-02 | |

REVISION DESCRIPTION

ENGINEERS * SURVEYORS * PLANNERS * LANDSCAPE ARCHITECTS * ENVIRONMENTAL SCIENTISTS * GEOGRAPHIC INFORMATION SYSTEMS CONSULTANTS * CONSTRUCTION MANAGERS

TIMMONS Founded 1953

# WHITEHILL TRACT INFRASTRUCTURE PLAN

PRINCE GEORGE, VIRGINIA

## HYDROLOGY AND EROSION CONTROL PLAN

| | |
|---|---|
| DATE | 11-19-01 |
| DRAWN BY | B.CRUTCHFIELD |
| DESIGNED BY | B.CRUTCHFIELD |
| CHECKED BY | D. JOHNSON |
| SCALE | 1" = 100' |
| JOB NO. | 65728 |
| SHEET NO. | 3 |


These plans and associated documents are the exclusive property of TIMMONS and may not be reproduced in whole or in part and shall not be used for any purpose whatsoever, inclusive, but not limited to construction, bidding, and/or construction staking without the express written consent of TIMMONS.