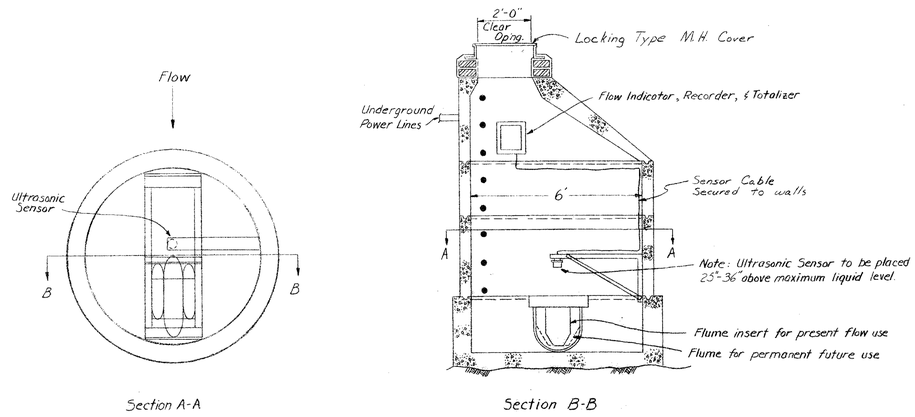

FLOW METERING STATION DETAIL

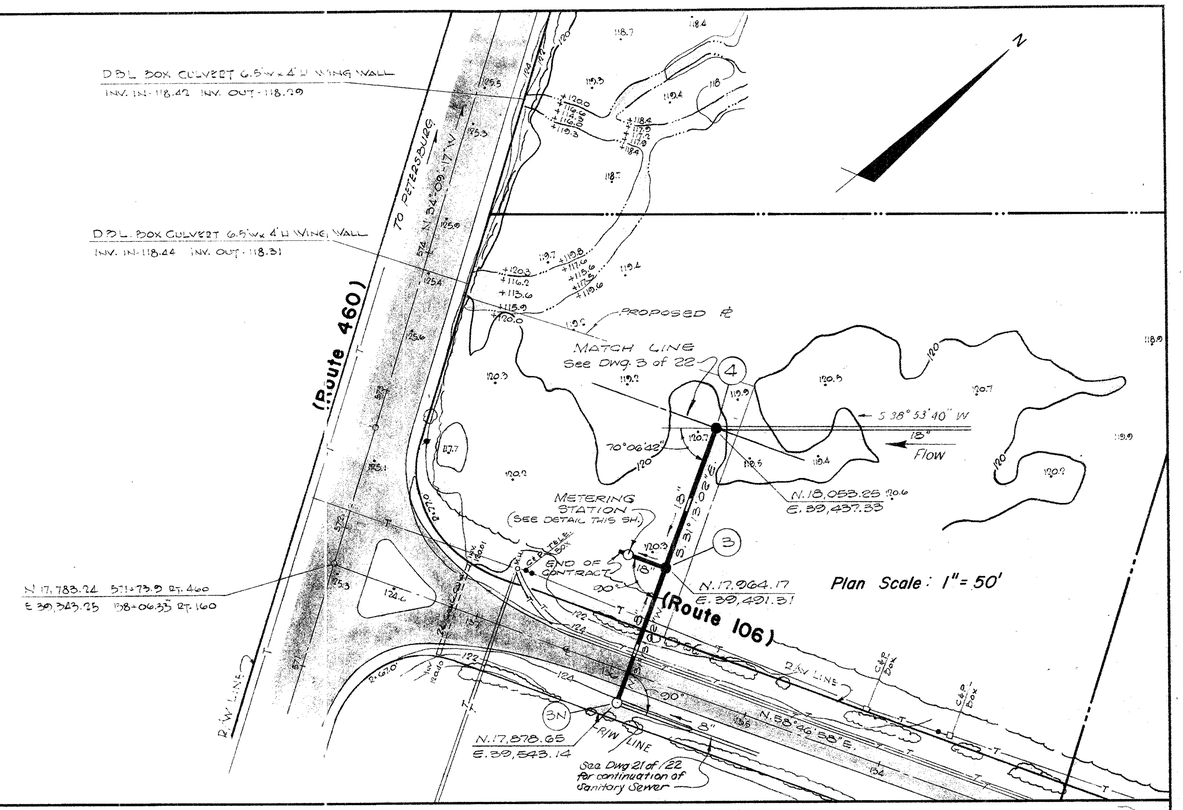

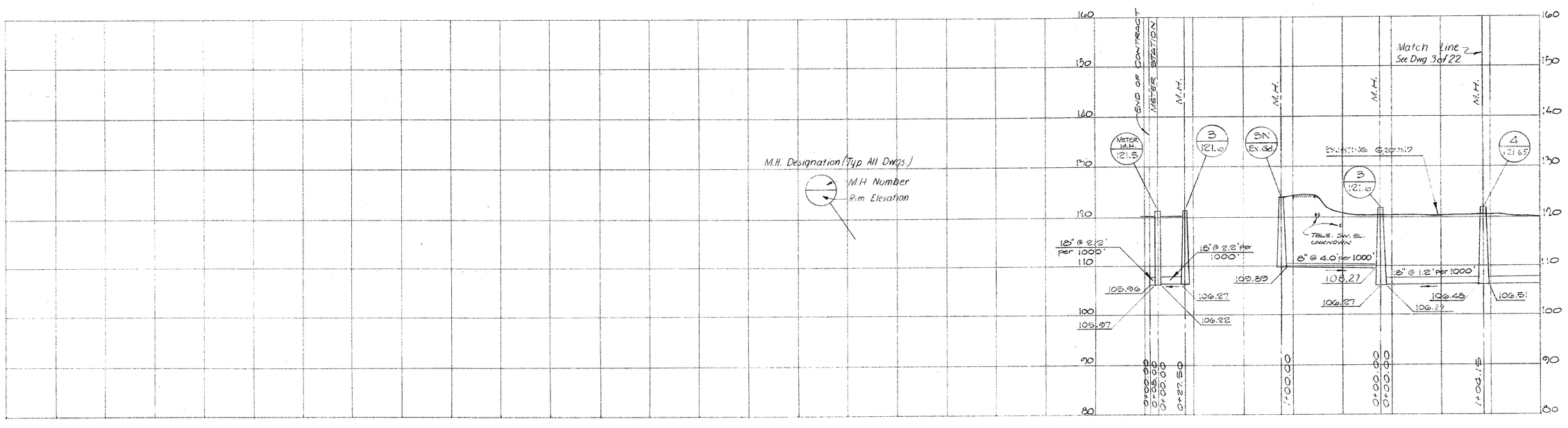

Profile Scale: 1" = 50' Horz.
1" = 10' Vert.

AS BUILT

NO.	DATE	APPR.	REVISION	NO.	DATE	APPR.	REVISION
1	12-15-76		RELOCATE SEWER				

COMMONWEALTH OF VIRGINIA
JOHN L. COMBS
CERTIFICATE No. 6442
REGISTERED PROFESSIONAL ENGINEER

		DATE
CHECKED	WHP	8-76
DES. ENG.	JLH	8-76
PROJ. ENG.		8-76
PROJ. MGR.	RFR	8-76
APPROVED		8-76
APPROVED		

SUB-1 Contract-1

PRINCE GEORGE COUNTY, VIRGINIA
UPPER BLACKWATER WASTEWATER COLLECTION SYSTEM
Blackwater Sanitary Sewer M.H. 1-4

ROY F. WESTON
ENVIRONMENTAL SCIENTISTS AND ENGINEERS
LEWIS LANE • WEST CHESTER • PENNSYLVANIA • 19380

PREPARED BY: VIRGINIA OFFICE

DRAWN	DATE	SCALE	W. O. NO.	DWG. NO
RLM	8-76	As Noted	1535-01	2 of 22

SHEET NO.