GENERAL NOTES

1. FEBRUARY 1, 2002 EDITION OF ROAD AND BRIDGE SPECIFICATIONS AND FEBRUARY 1, 2001 EDITION OF THE ROAD DESIGNS AND STANDARDS OF THE VIRGINIA DEPARTMENT OF HIGHWAYS SHALL GOVERN THE FOLLOWING:
   A. POURING, CURING, FORMS, WORKMANSHIP, ETC. OF ALL CONCRETE USED ON THIS PROJECT.
   B. STABILIZED BASE COURSE MATERIAL.
   C. MATERIALS AND INSTALLATION OF ALL PIPE CULVERTS.
2. THE VDOT APPROVAL OF THESE PLANS WILL EXPIRE THREE (3) YEARS FROM DATE OF APPROVAL.
3. OWNER WILL FURNISH SURVEY CONTROL OFF SET HUBS FOR ALL ROADS AND EASEMENTS FOR ALIGNMENT AND GRADE. ROADS WILL BE STAKED ON ONLY ONE SIDE. REPLACEMENT OF THESE HUBS AND ANY OTHER STAKING WILL BE DONE BY THE CONTRACTOR AT HIS EXPENSE. THE CONTRACTOR SHALL INSPECT THE CONTROL STAKING MENTIONED ABOVE AND VERIFY BEFORE CONSTRUCTION.
4. ALL GRADE STAKES DESTROYED BY THE CONTRACTOR, SHALL BE REPLACED AT HIS EXPENSE.
5. IT SHALL BE THE RESPONSIBILITY OF THE CONTRACTOR TO PRESERVE THE EXISTING RIGHT OF WAY STONES. ANY MARKERS DAMAGED SHALL BE REPLACED AT HIS EXPENSE.
6. CLEARING AND GRUBBING SHALL BE COMPLETE WITHIN THE RIGHT OF WAYS AS INDICATED ON LAYOUT PLAN.
7. ALL DRAINAGE EASEMENTS TO BE CLEARED, GRUBBED, AND GRADED TO CONTAIN WATER FROM PIPE CULVERTS AND TO EXTEND TO A NATURAL WATERCOURSE.
8. EXCESS EXCAVATION TO BE DISPOSED OF AS DIRECTED BY THE ENGINEER.
9. ALL FILLETS AT INTERSECTIONS TO HAVE 35' RADII UNLESS OTHERWISE NOTED.
10. GRADE LINES ON PROFILES DENOTE FINISHED GRADE OF CENTER LINE OF ROAD.
11. BASE MUST BE APPROVED BY VDOT FOR DEPTH, TEMPLATE, AND COMPACTION BEFORE SURFACE TREATMENT IS APPLIED.
12. SLOPE EASEMENTS FOR FILL SLOPES ARE REQUIRED WHERE SLOPES EXCEED PROPOSED RIGHT-OF-WAY LIMITS SHOWN.
13. PERMIT TO TIE INTO EXISTING ROADS, SHALL BE OBTAINED FROM RESIDENT ENGINEER PRIOR TO ROAD CONSTRUCTION.
14. ALL UTILITIES TO BE IN PLACE PRIOR TO LAYING BASE MATERIAL.
15. NO STRUCTURE SHALL BE CONSTRUCTED ON STATE MAINATAINED RIGHTS OF WAY UNLESS SAID STRUCTURES ARE SHOWN ON ROAD CONSTRUCTION PLANS APPROVED BY VDOT OR SUCH STRUCTURES ARE COVERED BY A VDOT LAND USE PERMIT (OR BY A LETTER OF INTENT FROM THE RESIDENT ENGINEER TO ISSUE SAID PERMIT AT THE TIME OF STATE ACCEPTANCE).

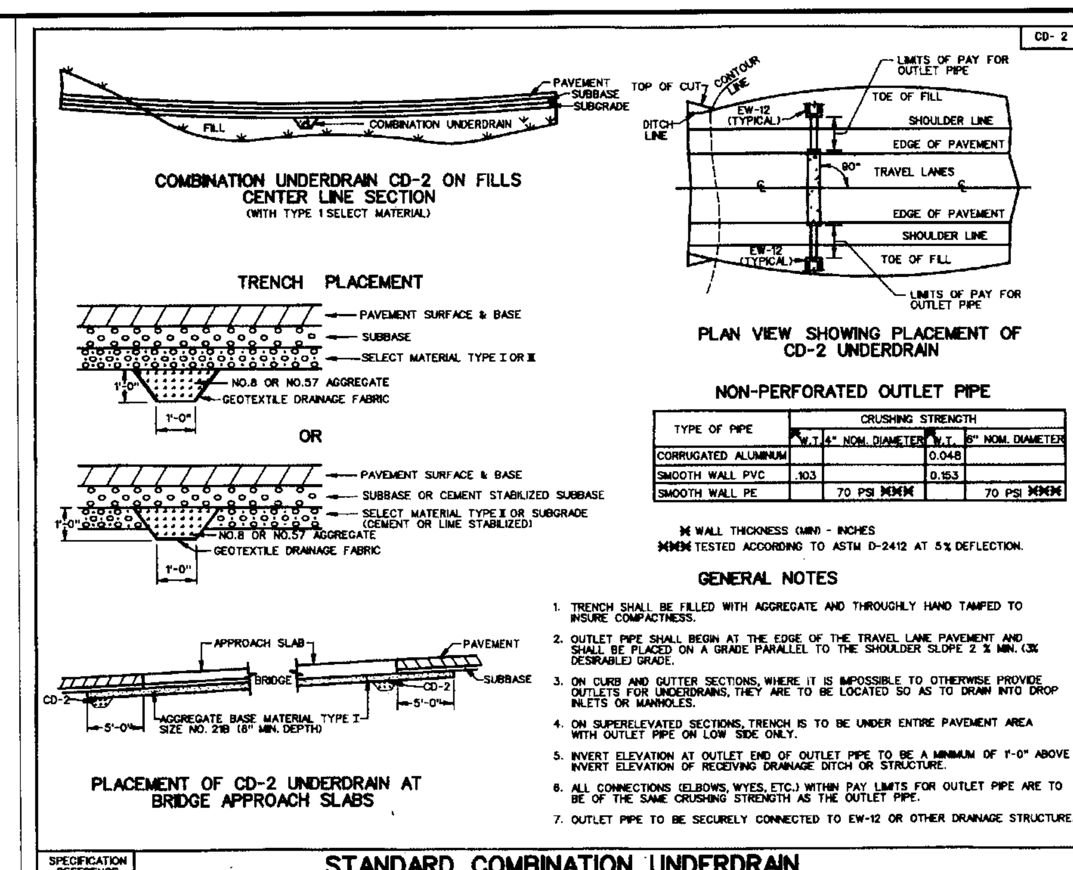

STANDARD COMBINATION UNDERDRAIN (AT GRADE SAGS AND BRIDGE APPROACHES)

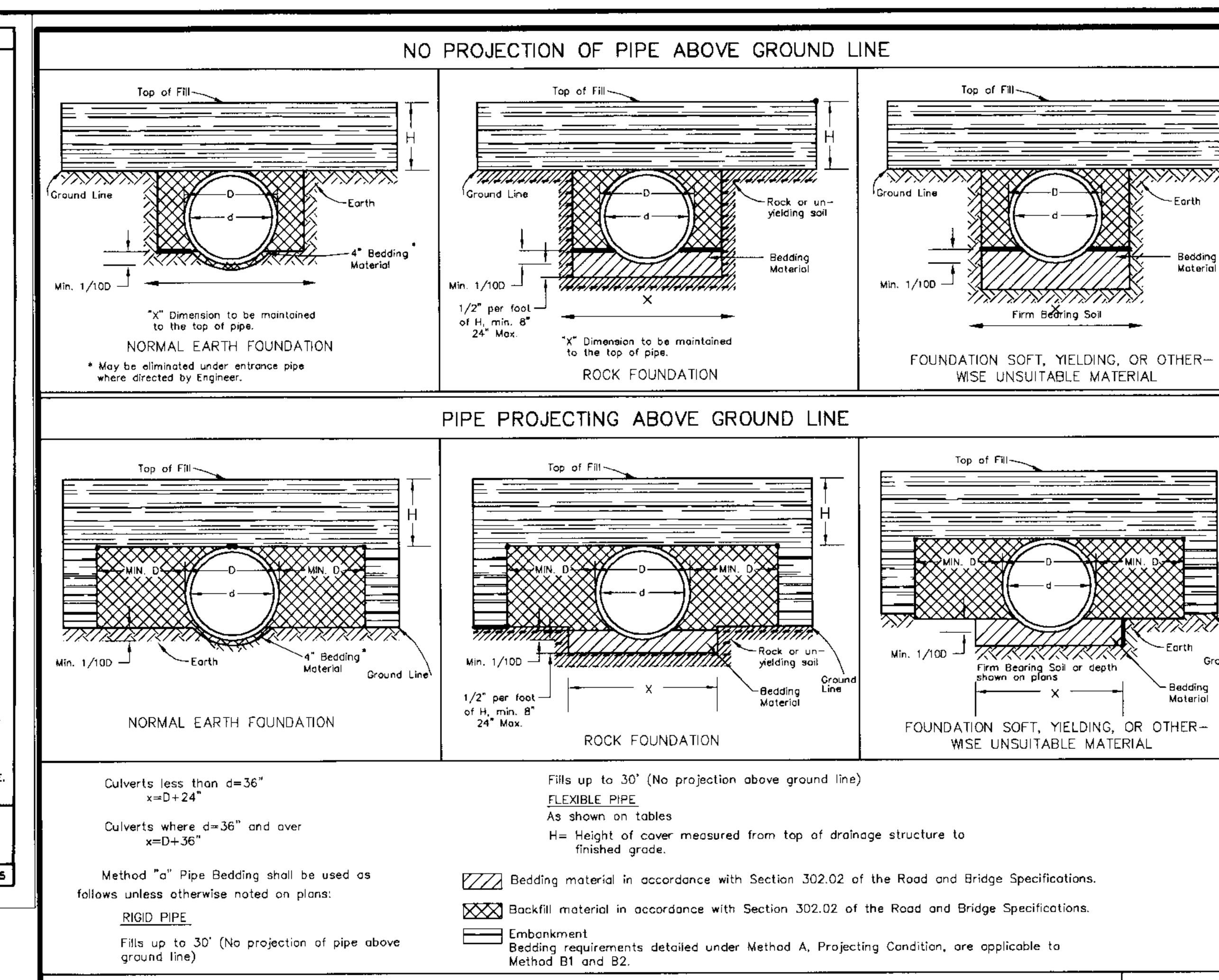

INSTALLATION OF PIPE CULVERTS AND STORM SEWERS
PIPE BEDDING – METHOD "A" (FILLS UP TO 30')

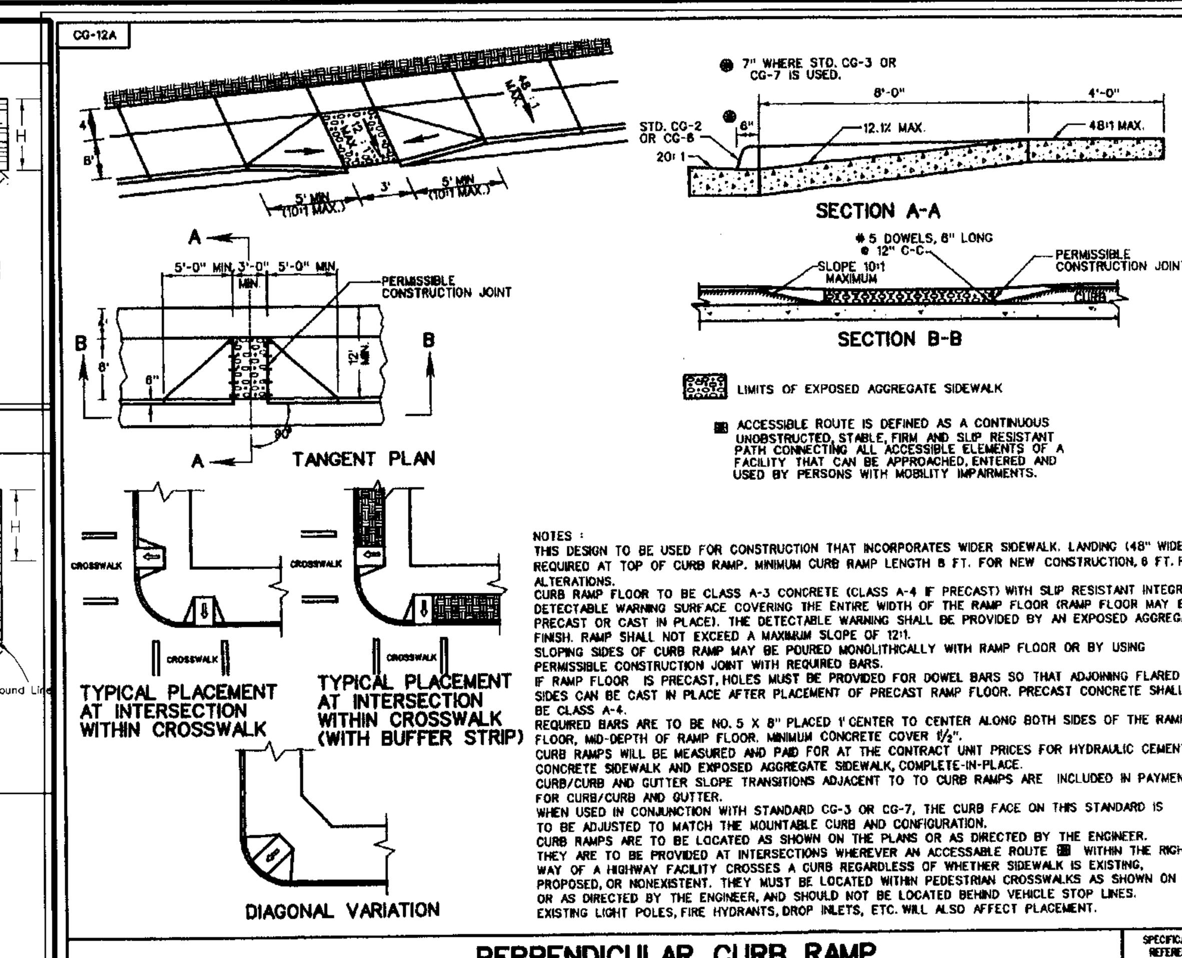

PERPENDICULAR CURB RAMP (ACCESS FOR MOBILITY IMPAIRMENTS)

PRINCE GEORGE COUNTY DEPARTMENT OF PUBLIC UTILITIES

NOTES:

1. ALL MATERIALS FOR SEWER AND WATER SYSTEMS SHOWN SHALL BE SUPPLIED AND INSTALLED IN ACCORDANCE WITH THE LATEST SPECIFICATIONS OF PRINCE GEORGE COUNTY APPLICABLE AT THE TIME OF NOTICE TO PROCEED.
2. FOR SEWER AND WATER INSTALLATION WITHIN EXISTING VDOT R/W; UTILITY CONTRACTORS MUST NOTIFY VDOT WHEN INSTALLATION BEGINS SO THAT DENSITY CAN BE TESTED ON TRENCH BACKFILL (95% ASTM. D-698 @ OPTIMUM MOISTURE ± 2%).
3. THE INSTALLATION OF A SEWER BACKFLOW DEVICE IS REQUIRED FOR ALL SERVICE CONNECTIONS WHERE THE FINISHED FLOOR ELEVATION IS LOWER THAN THE NEAREST DOWNGRADE AND/OR UPGRADE MANHOLE TOP ELEVATIONS. THIS DEVICE WILL BE INSPECTED BY THE BUILDING INSPECTION DEPARTMENT.
4. ALL WATER SERVICE CONNECTIONS BELOW THE ELEVATION CONTOUR OR WHERE THE PRESSURE IS GREATER THAN 80 P.S.I. WILL REQUIRE INDIVIDUAL PRESSURE REGULATORS AS REQUIRED BY BOCA CODE.
5. VERTICAL DATUM IS BASED ON MEAN SEA LEVEL (USC & GS DATUM). HORIZONTAL CONTROLS ARE BASED ON VIRGINIA STATE PLANE COORDINATE GRID, SOUTH ZONE, NORTH AMERICAN DATUM OF 1983 (NAD 83).
6. CONTRACTOR SHALL PROPERLY NOTIFY ALL PROPERTY OWNERS TWO (2) WEEKS PRIOR TO THE START OF ANY CONSTRUCTION (INCLUDING LAND CLEARING). NOTIFICATION SHALL BE IN THE FORM OF A LETTER SIMILAR TO THE "SAMPLE" REFLECTED IN THE COUNTY'S LATEST WATER AND SEWER SPECIFICATIONS (NOT-1).

DATE JAN. 2008	STANDARD SEWER AND WATER NOTES	DRWG. NO. DES-2
REVISIONS		

PRINCE GEORGE COUNTY DEPARTMENT OF PUBLIC UTILITIES

NOTES CONT:

13. THE ENGINEER WILL CERTIFY THAT THE ROADS ARE WITHIN 6-INCHES OF SUBGRADE BEFORE WATERLINE CONSTRUCTION CAN BEGIN.
14. FOR SEWER AND WATER INSTALLATION WITHIN EXISTING VDOT R/W; UTILITY CONTRACTORS SHALL NOTIFY VDOT 48 HOURS IN ADVANCE WHEN INSTALLATION BEGINS SO THAT DENSITY CAN BE TESTED (95% @ OPTIMUM MOISTURE + 20%)
15. CONTRACTOR SHALL VERIFY LOCATION AND ELEVATION OF ALL UNDERGROUND UTILITIES SHOWN ON THE PLANSIN AREAS OF CONSTRUCTION PRIOR TO STARTING THE WORK. CONTACT ENGINEER IMMEDIATELY, IF: LOCATION OR ELEVATION IS DIFFERENT FROM THAT SHOWN ON THE PLAN, OR IF: THERE APPEARS TO BE A CONFLICT, AND UPON DISCOVERY OF ANY UTILITY NOT SHOWN ON THE PLAN CALL MISS UTILITY OF VIRGINIA AT 1-800-552-7001 (TOLL FREE)
16. THE INSTALLATION OF A BACKFLOW DEVICE IS REQUIRED IN ALL HOUSES WHERE THE FINISHED FLOOR ELEVATION IS LOWER THAN THE TOP UPGRADE MANHOLE. THIS DEVICE WILL BE INSPECTED BY THE COUNTY BUILDING INSPECTOR.
17. INDIVIDUAL WATER SERVICES SHALL BE 3/4"
18. ALL WATERLINE VALVES MUST BE LOCATED ON THE TEE OR CROSS WHEN APPLICABLE.
19. ALL MANHOLES IN UTILITY EASEMENTS ARE TO HAVE THE CONCRETE SECTION EXTENDED ONE FOOT ABOVE THE GROUND OR DETAIL MAN-2B SHALL BE USED
20. A SMOOTH TRANSITION OF A DROP MANHOLE MUST BE PROVIDED FOR EACH LATERAL OR SANITARY SEWER ENTERING A SANITARY MANHOLE
21. ALL FIRE HYDRANTS SHALL BE O.S.H.A. RED IN COLOR.
22. METER BOXES PROVIDED SHALL BE CAST IRON 12"x18"x24" HIGH WITH CAST IRON LIDS. THE METER ASSEMBLIES ARE TO BE SUPPLIED WITH NEPTUNE PROREAD ENCODERS AND R900I PIT MIU (RF) ATTACHED TO THE LID. METERS ARE TO BE COMPATIBLE WITH THE PROPOSED SYSTEM. A WAND TYPE VISUAL READER COMPATIBLE WITH THE PROREAD SYSTEM WILL BE SUPPLIED TO THE UTILITY DEPARTMENT WITH THE WATER METERS.
23. ALL SANITARY SEWER LATERALS THAT ARE INSTALLED OUTSIDE OF THE R/W ARE TO HAVE THE CLEANOUT INSTALLED AT THE EDGE OF THE EASEMENT. A CARSONITE MARKER SHALL ALSO BE INSTALLED TO INDICATE THEIR LOCATION.
24. ALL HYDRANTS AND BENDS SHALL BE EQUIPPED WITH MEGA LUGS, KICKERS AND THRUST BLOCKS.
25. PRESSURE REDUCING VALVES SHALL BE USED ON LOTS WHERE THE STATIC PRESSURE IN THE SYSTEM EXCEEDS 80 PSI OR AS REQUIRED BY BUILDING CODE.
26. CLEANOUTS ARE TO BE INSTALLED ON ALL SANITARY LATERALS IN ACCORDANCE WITH PRINCE GEORGE COUNTY SPECIFICATIONS. THESE CLEANOUTS SHOULD BE INSTALLED AT THE EDGE OF THE R/W.

DATE JAN. 2008	STANDARD SEWER AND WATER NOTES	DRWG. NO. DES-2 SHEET 2 OF 3
REVISIONS		

PRINCE GEORGE COUNTY DEPARTMENT OF PUBLIC UTILITIES

NOTES CONT:

27. UTILITY INSPECTOR SHALL BE CONTACTED BEFORE INDIVIDUAL SERVICE CONNECTIONS ARE COVERED.
28. ALL MANHOLES WITHIN 1,000 FEET OF A FORCE MAIN DISCHARGE SHALL BE COATED AS REQUIRED IN THE LATEST COUNTY SPECIFICATIONS.
29. ALL INDIVIDUAL WATER AND SEWER CONNECTIONS SHALL BE MADE USING DOUBLE BANDED, STAINLESS STEEL, EPOXY COATED SADDLES.
30. A 'W' AND 'S' SHALL BE STAMPED IN THE CURB WHILE THE CONCRETE IS STILL WET. THESE MARKS SHALL INDICATE THE ACTUAL LOCATION OF THE WATER AND SEWER CONNECTIONS FOR EACH LOT.
31. ALL MANHOLES SHALL BE SEALED AT THE JOINTS WITH AN EXTERNAL RUBBER SLEEVE SIMILAR TO THE INFI-SHIELD SEAL WRAP AS MANUFACTURED BY SEALING SYSTEMS, INC. THE SEAL SHALL BE MADE OF EPDM (ETHYLENE PROPYLENE DIENE MONOMER) RUBBER WITH A MINIMUM THICKNESS OF 65 MILS. EACH UNIT SHALL HAVE A 2-INCH WIDE MASTIC STRIP ON THE TOP AND BOTTOM EDGE OF THE RUBBER WRAP. THE MASTIC SHALL BE NON-HARDENING BUTYL RUBBER SEALANT, WITH A MINIMUM THICKNESS OF 125 MILS.
32. THE BOXES FOR THE SEWER CONNECTIONS MUST BE MARKED AS SEWER CONNECTIONS RATHER THAN WATER METER.
33. ALL GATE VALVE BOXES LOCATED OUTSIDE THE PAVEMENT NEED TO BE ENCLOSED IN A 12"x12"x6" CONCRETE ENLOSURE.

DATE JAN. 2008	STANDARD SEWER AND WATER NOTES	DRWG. NO. DES-2 SHEET 3 OF 3
REVISIONS		

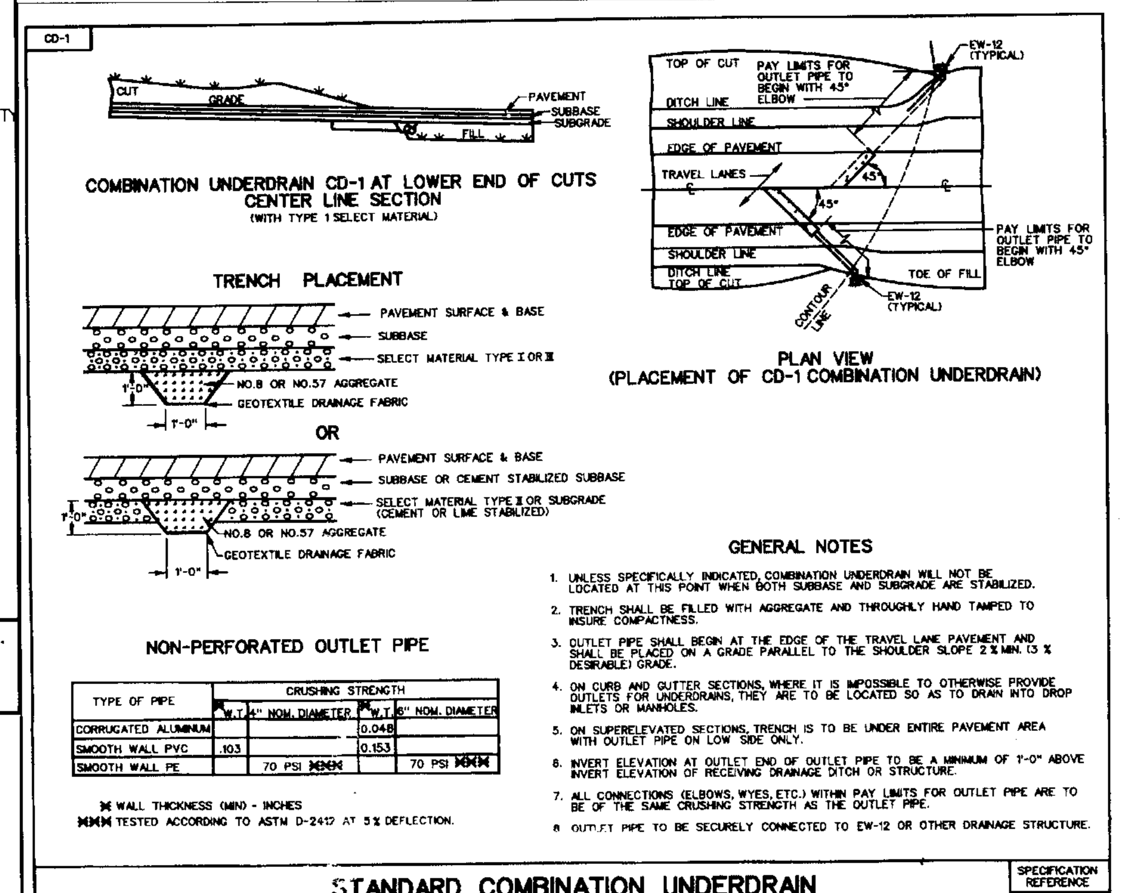

STANDARD COMBINATION UNDERDRAIN (AT LOWER END OF CUTS)

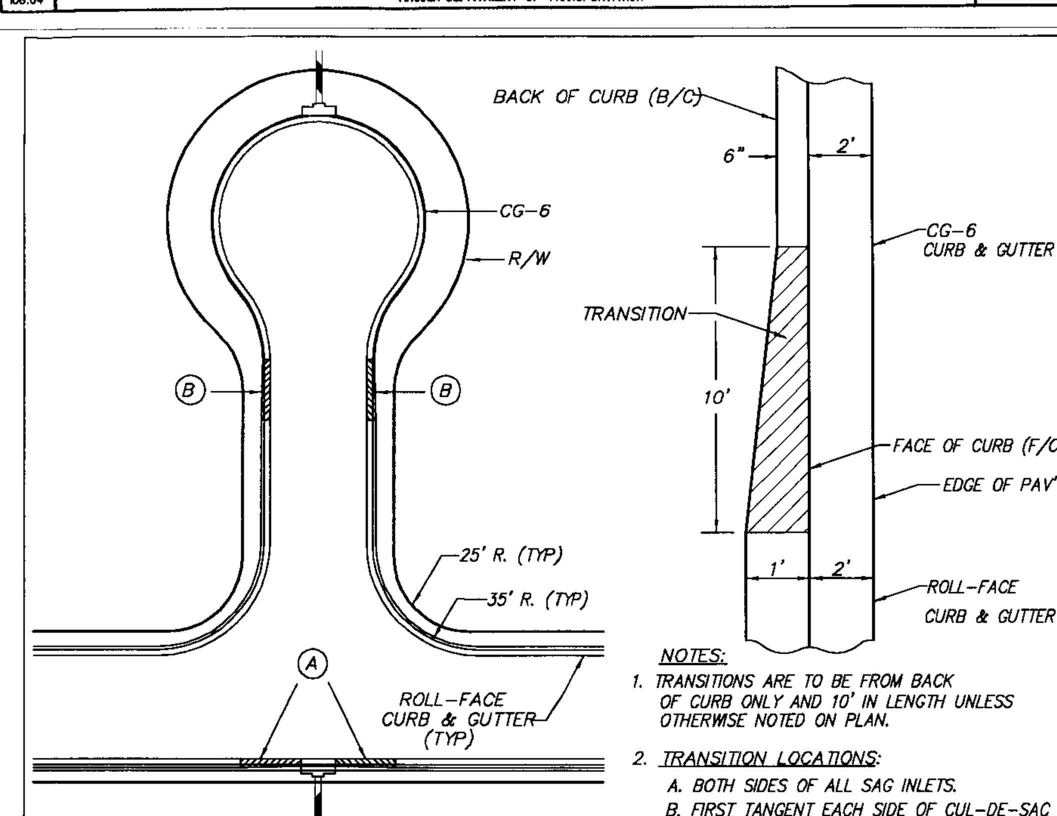

CURB TRANSITION
(FROM ROLL-FACE CURB TO CG-6)

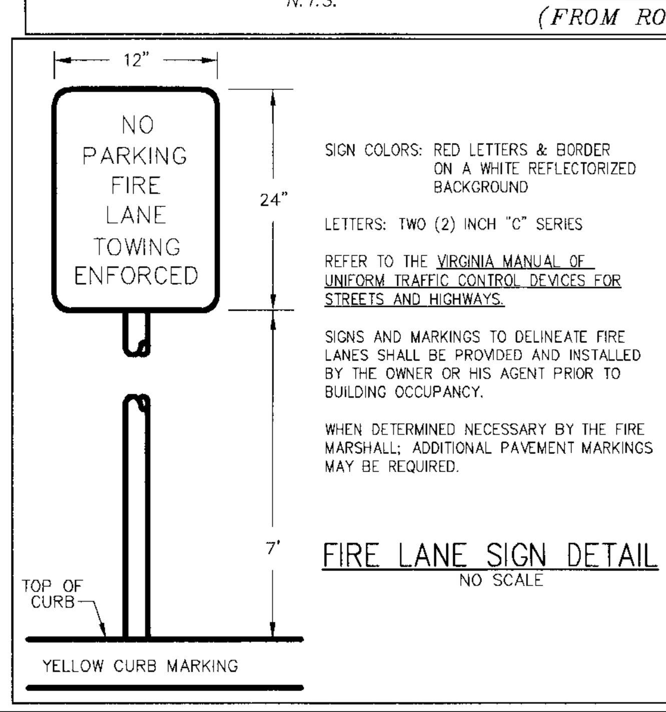

FIRE LANE SIGN DETAIL
NO SCALE

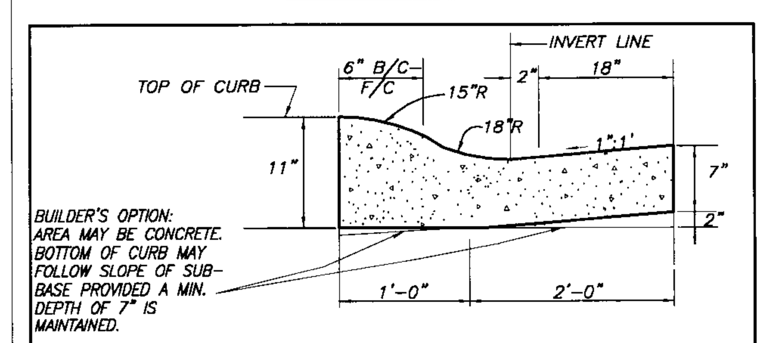

VDOT ROLLTOP CURB
NO SCALE
VDOT MUST INSPECT CURB FORMS 24 HOURS BEFORE THE PLACEMENT OF CURB & GUTTER CONCRETE.

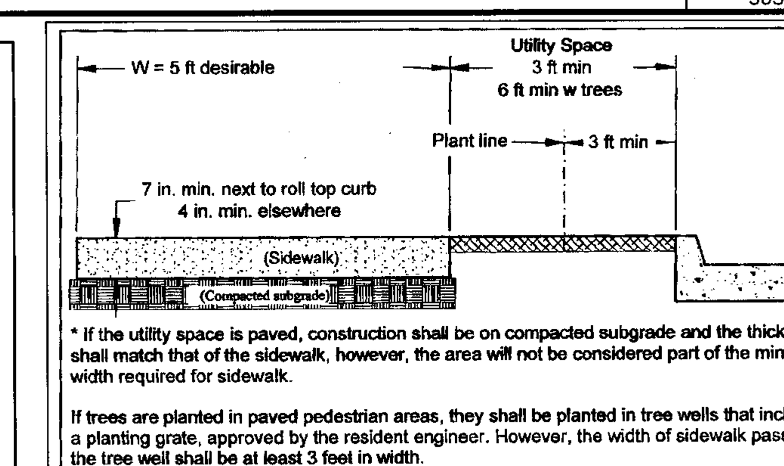

Figure 6 –Detail back of curbs

PRINCE GEORGE COUNTY DEPARTMENT OF PUBLIC UTILITIES

OPTION 1: IF GRADE ADJUSTMENT IS NOT REQUIRED:
A. CONNECTOR PIPE MAY BE APPROVED D.I. OR P.V.C. PIPE.
B. ALL JOINTS FROM HYDRANT TEE TO HYDRANT ARE TO BE RESTRAINED WITH APPROVED JOINT RESTRAINT DEVICES AND THRUST BLOCKING BEHIND THE HYDRANT

OPTION 2: IF GRADE ADJUSTMENT IS REQUIRED:
A. THE CONNECTOR PIPE SHALL BE OF THE OFFSET DESIGN SO THAT THE FIRE HYDRANT CAN BE ADJUSTED TO ENSURE PLACEMENT AT THE PROPER GRADE. WHEN THE CONNECTOR PIPE IS THE OFFSET DESIGN IT SHALL HAVE AN ANCHORING FEATURE AT BOTH ENDS SO THAT WHEN USED WITH M.J. SPLIT GLANDS A RESTRAINED JOINT IS PROVIDED.
B. ALL JOINTS FROM HYDRANT TEE TO HYDRANT ARE TO BE RESTRAINED WITH APPROVED JOINT RESTRAINT DEVICES AND THRUST BLOCKING BEHIND THE HYDRANT

C. THE CONNECTOR PIPE SHALL BE CEMENT LINED IN ACCORDANCE WITH AWWA C110-ANSI A214.
D. THE CONNECTOR PIPE SHALL BE DUCTILE IRON AWWA C153-ANSO A21.53 AND POSITIONED BETWEEN THE FIRE HYDRANT AND GATE VALVE.
E. HYDRANT BREAKAWAY FLANGE SHOULD BE LOCATED NO MORE THAN 6" ABOVE FINISHED GRADE AND NOT BELOW FINISHED GRADE.

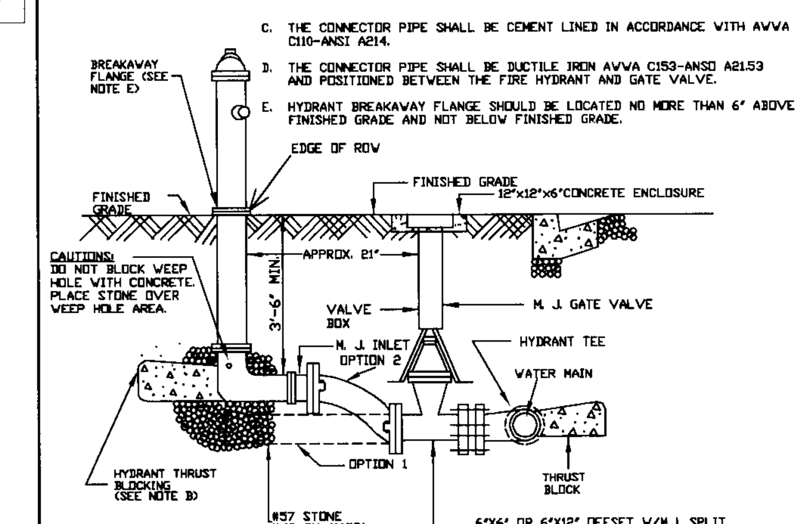

NOTE:
(A). HYDRANT ISOLATION VALVE TO BE LOCATED AS CLOSE TO THE HYDRANT AS POSSIBLE
(B) MINIMUM COVER AT DITCH MUST BE 3'6" OR GREATER.

DATE JAN. 2008	TYPICAL FIRE HYDRANT DETAIL	DRWG. NO. FIR-2
REVISIONS		

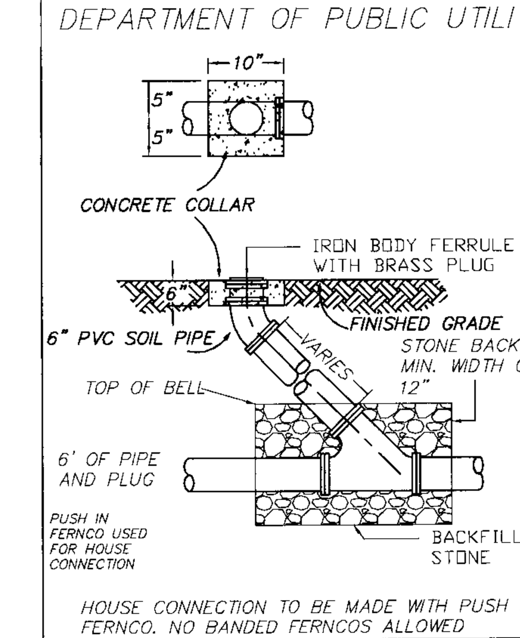

SANITARY SEWER CLEANOUT – EARTH (SEW-10)

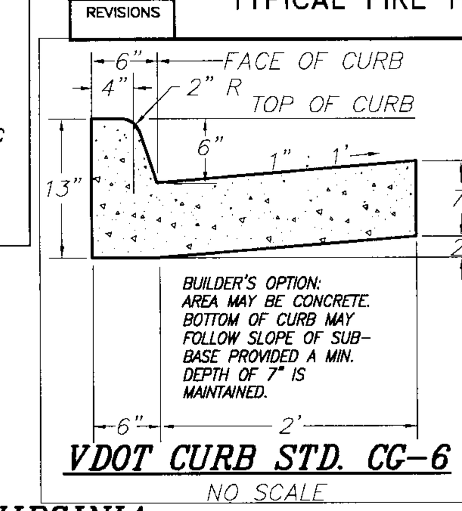

VDOT CURB STD. CG-6
NO SCALE

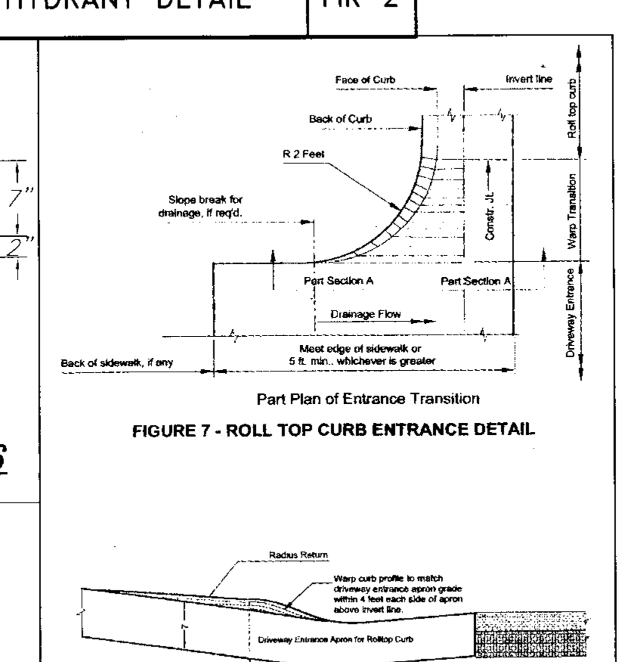

FIGURE 7 - ROLL TOP CURB ENTRANCE DETAIL
FIGURE 8 ROLLTOP CURB ENTRANCE DETAIL SECTION

MISS UTILITY OF VIRGINIA:

THE CONTRACTOR SHALL CALL "MISS UTILITY" 48 HOURS PRIOR TO THE START OF EXCAVATION. CONTRACTOR SHALL VERIFY LOCATION AND ELEVATION OF ALL UNDERGROUND UTILITIES SHOWN ON PLANS IN AREAS OF CONSTRUCTION PRIOR TO STARTING WORK. CONTACT THE ENGINEER IMMEDIATELY IF THE LOCATION OR ELEVATION IS DIFFERENT FROM THAT SHOWN ON THE PLAN, IF THERE APPEARS TO BE A CONFLICT, AND/OR UPON DISCOVERY OF ANY UTILITY NOT SHOWN ON PLAN. THE DEVELOPER SHALL BE RESPONSIBLE FOR THE RELOCATION OF ANY UTILITY WITHIN THE EXISTING AND/OR RIGHT OF WAY REQUIRED BY THE DEVELOPMENT. CONTACT MISS UTILITY OF VIRGINIA: 1-800-552-7001 (TOLL FREE)

CERTIFICATION

I, WE HEREBY CERTIFY THAT THE LOT LINES, LOT NUMBERS, BLOCK NUMBERS AND THE STREET NAMES SHOWN ON THESE PLANS ARE IDENTICAL TO THOSE SHOWN ON THE OFFICIAL RECORDED PLAT, AND NO CHANGES WILL BE MADE WITHOUT PRIOR APPROVAL FROM THE UTILITY DEPARTMENT. IF ANY CHANGES ARE APPROVED, REVISED WATER AND/OR SEWER PLANS WILL BE SUBMITTED WITHIN 48 HOURS AFTER APPROVAL.

SIGNATURE: ____________________

PRINCE GEORGE COUNTY DEPARTMENT OF PUBLIC UTILITIES

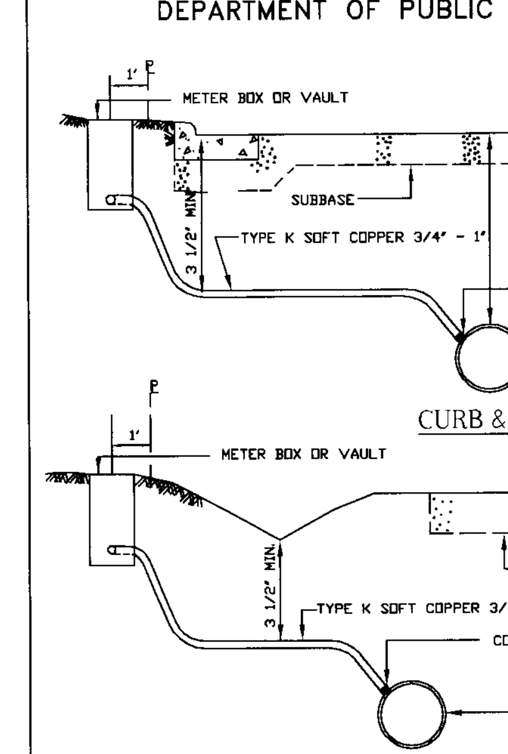

NOTES:
1. 1 1/2" - 2" TAPS SHOULD BE MADE AT THE SPRING LINE OF THE MAIN LINE.
2. SADDLE MUST BE USED IF TAP IS MADE IN PVC OR A/C PIPE.
3. SADDLES TO BE DOUBLE BANDED EPOXY COATED STAINLESS STEEL.

DATE JAN. 2008	WATER SERVICE INSTALLATION DETAIL	DRWG. NO. MET-2
REVISIONS		

PRINCE GEORGE COUNTY DEPARTMENT OF PUBLIC UTILITIES

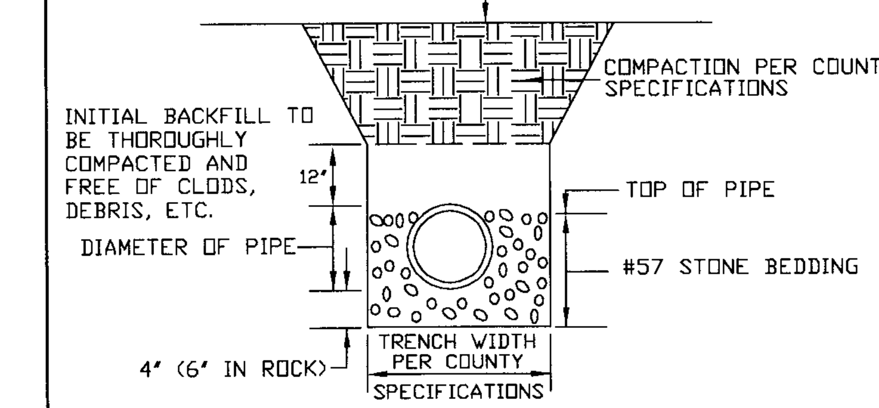

NOTE: FOR DEPTHS IN EXCESS OF 12 FEET, WHEN APPROVED BY THE COUNTY, PIPE NEEDS TO BE DUCTILE IRON PIPE WITH 12 INCHES OF STONE ON TOP

NOTE: CONTRACTOR MUST INSURE THE STONE IS PROPERLY COMPACTED, ESPECIALLY UNDER THE HAUNCHES OF THE PIPE.

DATE JAN. 2008	BEDDING AND BACKFILL DETAIL FOR PLASTIC SEWER PIPE	DRWG. NO. SEW-2
REVISIONS		

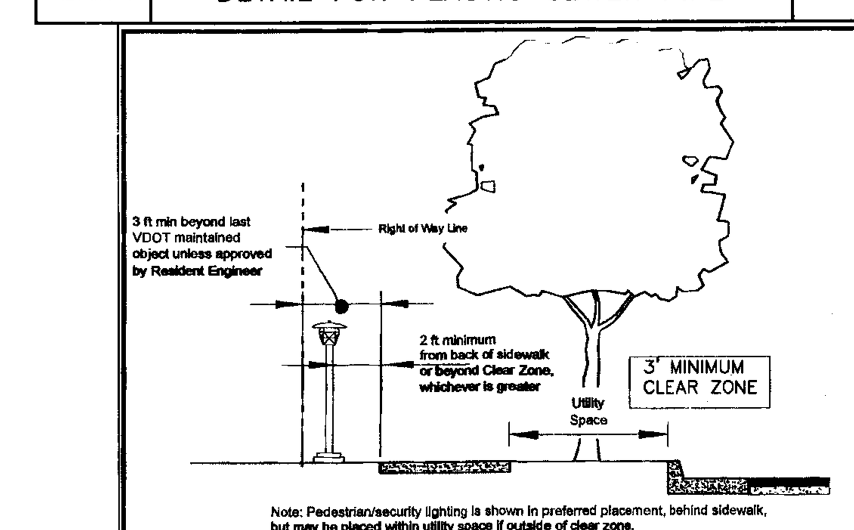

Pedestrian Lighting Placement - Curb and Gutter Roadways

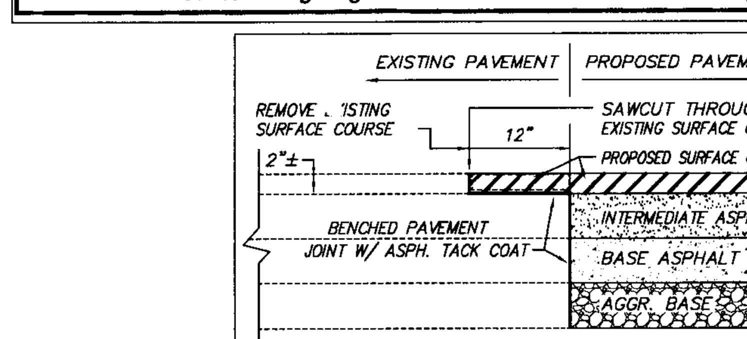

NOTE: PROPOSED PAVEMENT MUST TIE IN WITH EXISTING PAVEMENT

PAVEMENT JOINT DETAIL

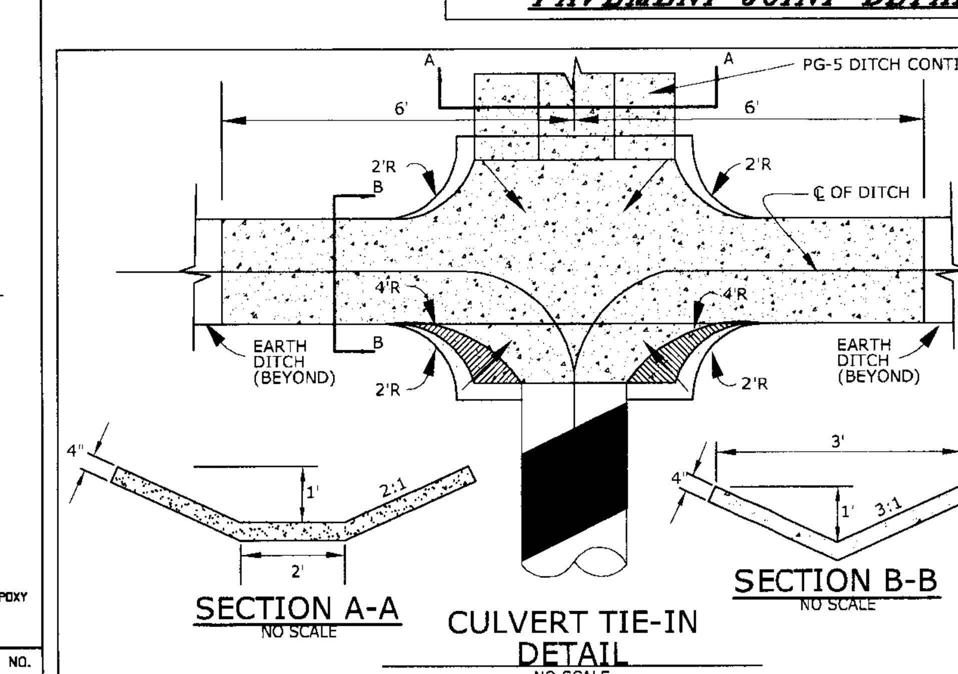

CULVERT TIE-IN DETAIL
NO SCALE

NOTE:
CONCRETE SHALL BE CLASS A3 CAST-IN-PLACE.

DERRICK A. JOHNSON Lic. No. 24761 10-16-09

VIRGINIA | NORTH CAROLINA | WEST VIRGINIA
THIS DRAWING PREPARED AT THE PRINCE GEORGE OFFICE
4260 Crossings Blvd | Prince George, VA 23875
TEL 804.541.6600 FAX 804.751.0798 www.timmons.com

YOUR VISION ACHIEVED THROUGH OURS.
Site Development | Residential | Infrastructure | Technology

TIMMONS GROUP

DATE	REVISION DESCRIPTION
8-30-05	COUNTY & VDOT COMMENTS
11-07-05	COUNTY & VDOT COMMENTS
1-12-06	COUNTY & VDOT COMMENTS
02-16-06	COUNTY & VDOT COMMENTS
6-16-06	COUNTY COMMENTS
10-15-09	UTILITY COMMENTS

DATE 6-20-05
DRAWN BY K.HALPAUS
DESIGNED BY K.HALPAUS
CHECKED BY D. JOHNSON
SCALE NONE

TOOMBS SUBDIVISION
BLAND DISTRICT * PRINCE GEORGE COUNTY, VIRGINIA
GENERAL NOTES AND DETAILS

JOB NO. 22247
SHEET NO. C1.1

These plans and associated documents are the exclusive property of TIMMONS GROUP and may not be reproduced in whole or in part and shall not be used for any purpose whatsoever, inclusive, but not limited to construction, bidding, and/or construction staking without the express written consent of TIMMONS GROUP.