PRINCE GEORGE COUNTY
DEPARTMENT OF PUBLIC UTILITIES

MAXIMUM TRENCH WIDTH SHALL BE 33" FOR SEWER UP TO 12" DIAMETER. USE OUTSIDE PIPE DIAMETER PLUS 18" FOR SEWER 15" AND LARGER.

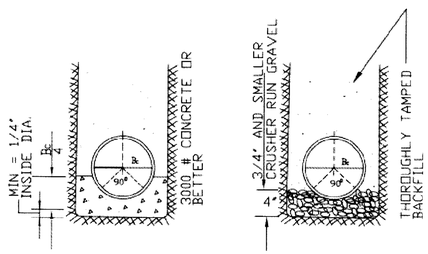

CLASS A CLASS B

DATE JAN. 2008 / REVISIONS	TYPES OF SEWER BEDDING	DRWG. NO. SEW-1

1 TYPES OF SEWER BEDDING
No Scale

PRINCE GEORGE COUNTY
DEPARTMENT OF PUBLIC UTILITIES

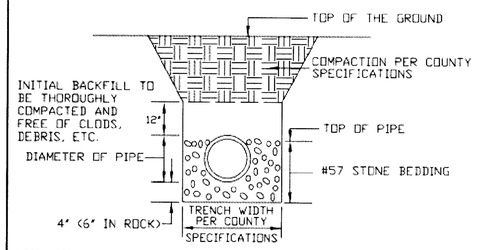

NOTE: FOR DEPTHS IN EXCESS OF 12 FEET, WHEN APPROVED BY THE COUNTY, PIPE NEEDS TO BE DUCTILE IRON PIPE WITH 12 INCHES OF STONE ON TOP

NOTE: CONTRACTOR MUST INSURE THE STONE IS PROPERLY COMPACTED, ESPECIALLY UNDER THE HAUNCHES OF THE PIPE.

DATE JAN. 2008 / REVISIONS	BEDDING AND BACKFILL DETAIL FOR PLASTIC SEWER PIPE	DRWG. NO. SEW-2

2 BEDDING AND BACKFILL DETAIL FOR PLASTIC SEWER PIPE
No Scale

PRINCE GEORGE COUNTY
DEPARTMENT OF PUBLIC UTILITIES

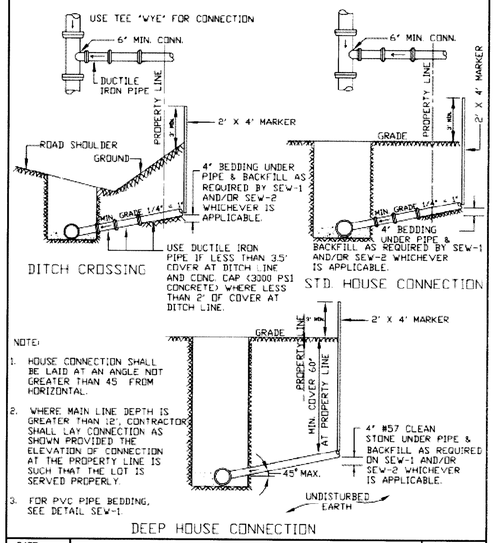

NOTE:

1. HOUSE CONNECTION SHALL BE LAID AT AN ANGLE NOT GREATER THAN 45° FROM HORIZONTAL.
2. WHERE MAIN LINE DEPTH IS GREATER THAN 12', CONTRACTOR SHALL LAY CONNECTION AS SHOWN PROVIDED THE ELEVATION OF CONNECTION AT THE PROPERTY LINE IS SUCH THAT THE LOT IS SERVED PROPERLY.
3. FOR PVC PIPE BEDDING, SEE DETAIL SEW-1.

DATE JAN. 2008 / REVISIONS	HOUSE CONNECTION DETAILS	DRWG. NO. SEW-4

3 HOUSE CONNECTION DETAILS
No Scale

PRINCE GEORGE COUNTY
DEPARTMENT OF PUBLIC UTILITIES

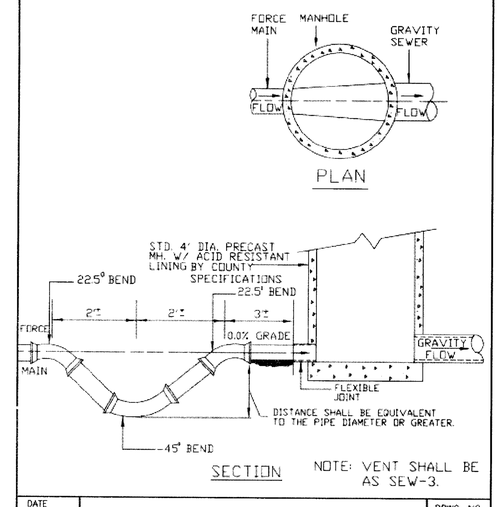

NOTE: VENT SHALL BE AS SEW-3.

DATE JAN. 2008 / REVISIONS	FORCE MAIN DISCHARGE	DRWG. NO. SEW-6

4 FORCE MAIN DISCHARGE
No Scale

PRINCE GEORGE COUNTY
DEPARTMENT OF PUBLIC UTILITIES

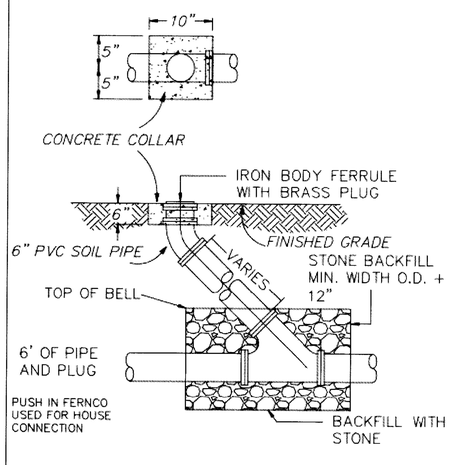

HOUSE CONNECTION TO BE MADE WITH PUSH IN 6"x4" FERNCO. NO BANDED FERNCOS ALLOWED

DATE JAN. 2008 / REVISIONS APRIL 2010	SANITARY SEWER CLEANOUT – EARTH	DRWG. NO. SEW-10

5 SANITARY SEWER CLEANOUT - EARTH
No Scale

PRINCE GEORGE COUNTY
DEPARTMENT OF PUBLIC UTILITIES

MINIMUM SPECIFIED TIME REQUIRED FOR A 1.0 PSIG PRESSURE DROP FOR SIZE AND LENGTH OF PIPE INDICATED PRESSURE DROP FROM 3.5 PSIF TO 2.5 PSIG*

PIPE DIAMETER (IN.)	MINIMUM TIME (MIN SEC)	TIME FOR LENGTH (L) (SEC)	SPECIFICATION TIME FOR LENGTH (L) SHOWN (MIN:SEC)							
			100 FT	150 FT	200 FT	250 FT	300 FT	350 FT	400 FT	450 FT
6	5:40	.854 L	5:40	5:40	5:40	5:40	5:40	5:40	5:42	6:24
8	7:34	1.520 L	7:34	7:34	7:34	7:34	7:36	8:52	10:08	11:24
10	9:26	2.374 L	9:26	9:26	9:26	9:53	11:52	13:51	15:49	17:48
12	11:20	3.418 L	11:20	11:20	11:24	14:15	17:05	19:56	22:47	25:38
15	14:10	5.342 L	14:10	14:10	17:48	22:15	26:42	31:09	35:36	40:04
18	17:00	7.692 L	17:00	19:13	25:38	32:03	38:27	44:52	51:16	57:41
21	19:50	10.470 L	19:50	26:10	34:54	43:37	52:21	61:00	69:48	78:31
24	22:40	13.674 L	22:47	34:11	45:34	56:58	68:22	79:46	91:10	102:33
27	25:30	17.306 L	28:51	43:16	57:41	72:07	86:32	100:57	115:22	129:48
30	28:20	21.366 L	35:37	53:25	71:13	89:02	106:50	124:38	142:26	160:15
33	31:10	25.852 L	43:05	64:38	86:10	107:43	129:16	150:43	172:21	193:53
36	34:00	30.768 L	51:17	76:55	102:34	128:12	153:50	179:29	205:07	230:46
42	45:21	41.883 L	69:48	104:47	139:37	174:31	209:25	244:19	279:13	314:07

*The 3.5 psig test pressure shall be increased by adding the average vertical height in feet of ground water above the sewer pipe invert, divided by 2.31 but the maximum starting test pressure shall not exceed 9 psig.

DATE JAN. 2008 / REVISIONS	PVC PIPE AIR TEST TABLE BASED ON FORMULAS FROM UNI-B-6-90	DRWG. NO. TST-2

6 PVC PIPE AIR TEST TABLE
No Scale

PRINCE GEORGE COUNTY
DEPARTMENT OF PUBLIC UTILITIES

MINIMUM TEST TIME TWO HOURS

WATER LINE TEST BASED ON 150 PSI	
SIZE	MAX. ALLOWABLE LEAKAGE
3/4"	.0138 (GAL/2 HRS)/100 L.F.
1"	.0184 (GAL/2 HRS)/100 L.F.
1 1/2"	.0276 (GAL/2 HRS)/100 L.F.
2"	.0368 (GAL/2 HRS)/100 L.F.
3"	.0552 (GAL/2 HRS)/100 L.F.
4"	.0736 (GAL/2 HRS)/100 L.F.
6"	.1103 (GAL/2 HRS)/100 L.F.
8"	.1471 (GAL/2 HRS)/100 L.F.
12"	.2207 (GAL/2 HRS)/100 L.F.

WATER LINE TEST BASED ON 150 PSI	
SIZE	MAX. ALLOWABLE LEAKAGE
16"	.2942 (GAL/2 HRS)/100 L.F.
20"	.3678 (GAL/2 HRS)/100 L.F.
24"	.4413 (GAL/2 HRS)/100 L.F.
30"	.5517 (GAL/2 HRS)/100 L.F.
36"	.6620 (GAL/2 HRS)/100 L.F.
42"	.7724 (GAL/2 HRS)/100 L.F.
48"	.8827 (GAL/2 HRS)/100 L.F.
54"	.9930 (GAL/2 HRS)/100 L.F.

MAXIMUM ALLOWABLE LEAKAGE FOR THE WATER MAIN WILL BE CALCULATED USING THE FOLLOWING FORMULA:

$$L = \frac{SD\sqrt{P}}{148000}$$

WHERE:

L = MAXIMUM ALLOWABLE LEAKAGE, GALLONS/HOUR
S = LENGTH OF PIPE IN TEST SECTION, IN FEET
D = NOMINAL DIAMETER OF TESTED PIPE, IN INCHES
P = TEST PRESSURE, POUNDS PER SQUARE INCH 150 PSI OR 1 1/2 THE WORKING PRESSURE WHICHEVER IS GREATER MEASURED AT THE HIGH POINT OF THE TEST SYSTEM.

DATE Jan. 2008 / REVISIONS Sep. 2011	ALLOWABLE LEAKAGE TABLE – WATER LINES BASED ON FORMULAS FROM AWWA SPECIFICATIONS	DRWG. NO. TST-3

7 ALLOWABLE LEAKAGE TABLE - WATER LINES
No Scale

PRINCE GEORGE COUNTY
DEPARTMENT OF PUBLIC UTILITIES

MINIMUM TEST TIMES FOR VARIOUS MANHOLE DIAMETERS

DEPTH (FT)	DIAMETER, (IN.)								
	30	33	36	42	48	54	60	66	72
	TIME, (SEC)								
8	11	12	14	17	20	23	26	29	33
10	14	15	18	21	25	29	33	36	41
12	17	18	21	25	30	35	39	43	49
14	20	21	25	30	35	41	46	51	57
16	22	24	39	34	40	46	52	58	67
18	25	27	32	38	45	52	59	65	73
20	28	30	35	42	50	53	65	72	81
22	31	33	39	46	55	64	72	79	89
24	33	36	42	51	59	64	78	87	97
26	36	39	46	55	64	75	85	94	105
28	39	42	49	59	69	81	91	101	113
30	42	45	53	63	74	87	98	108	121

NOTE

1. THE TEST HEAD SHALL BE PLACED AT THE TOP OF THE MANHOLE IN ACCORDANCE WITH THE MANUFACTURER'S RECOMMENDATIONS.
2. A VACUUM OF 10 IN. OF MERCURY SHALL BE DRAWN ON THE MANHOLE, THE VALVE ON THE VACUUM LINE OF THE TEST HEAD CLOSED, AND THE THE VACUUM PUMP SHUT OFF. THE TIME SHALL BE MEASURED FOR THE VACUUM TO DROP TO 9 IN. OF MERCURY.
3. THE MANHOLE SHALL PASS IF THE TIME FOR THE VACUUM READING TO DROP FROM 10 IN. OF MERCURY TO 9 IN. OF MERCURY MEETS OR EXCEEDS THE VALUES INDICATED IN TABLE 1.
4. IF THE MANHOLE FAILS THE INITIAL TEST, NECESSARY REPAIRS SHALL BE MADE BY AN APPROVED METHOD. THE MANHOLE SHALL THEN BE RETESTED UNTIL A SATISFACTORY TEST IS OBTAINED.

DATE JAN. 2008 / REVISIONS	VACUUM TEST (ASTM C 1244) FOR CONCRETE SEWER MANHOLES	DRWG. NO. SEW-9

8 VACUUM TEST FOR CONCRETE SEWER MANHOLES
No Scale

sekivsolutions
OPTIMIZING YOUR DEVELOPMENT WORLD
14207 POND CHASE PLACE | MIDLOTHIAN, VA | 23113
TELEPHONE NO. 804.938.8864 | www.sekivsolutions.com

QUALITY ASSURANCE : STUART LITTLE
PROJECT MANAGER : CHRIS THOMPSON
PROJECT NO. : 10106
SCALE : AS SHOWN

COMMONWEALTH OF VIRGINIA
Stuart G. Little
Lic. No. 39974
04/7/14
PROFESSIONAL ENGINEER

DATE : APRIL 7, 2014

REVISION BLOCK	
DATE	DESCRIPTION
-	-

MWC DEVELOPMENT, LLC
P.O. BOX 694
PRINCE GEORGE, VA 23875
CONTACT: KRIS CUTLER

TINSLEY CHARTER SUBDIVISION - SECTIONS 6, 7 AND 8

UTILITY DETAILS

SHEET NO.
C6.7