PRINCE GEORGE COUNTY
DEPARTMENT OF PUBLIC UTILITIES

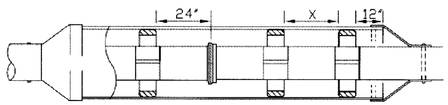

CASING DETAIL NOTES:

1. CARRIER PIPE SHALL BE CENTERED WITHIN CASING BY AN APPROVED STAINLESS STEEL CASING SPACER.
2. CASING PIPE SHALL BE SEALED BY USE OF WRAPAROUND END SEALS OR WRAP ENDS OF CARRIER PIPE WITH TAR PAPER AND INSTALL 4" THICK BRICK AND MORTAR PLUG IN THE ANNULAR SPACE A 1" WEEP HOLE.
3. THREE CASING SPACERS SHALL BE ATTACHED TO EACH JOINT OF CARRIER PIPE WITH ONE AT THE CENTER AND ONE NOT MORE THAN 24" FROM EACH END.
4. ONE CASING SPACER SHALL BE LOCATED NOT MORE THAN 12" FROM EACH END OF CASING PIPE.
5. VALVES OR OTHER CONTROL/MAINTENANCE EQUIPMENT ATTACHED TO WATERLINE/ SEWER FORCE MAINS SHALL BE LOCATED A MINIMUM FOUR PIPE LENGTHS FROM THE END OF THE CASING, OR AS APPROVED BY THE COUNTY.
6. STEEL CASING SHALL HAVE A MINIMUM YIELD STRENGTH OF 35,000 PSI AND SUFFICIENT CORROSION PROTECTION.
7. LINES TO BE ENCASED UNDER STATE ROADS/RAILROADS WILL COMPLY WITH COUNTY AND ANY APPLICABLE VDOT/AMERICAN RAILROAD ENDINEERING SPECIFICATIONS WHICHEVER IS MORE STRINGENT.
8. WHEN INSTALLING CARRIER PIPE, CONTRACTOR SHALL PUSH SO THAT PIPE JOINTS ARE ALWAYS BEING COMPRESSED.
9. REINFORCED CONCRETE CASING PIPE SHALL BE ASTM C-76, CLASS III STEEL CASING PIPE SHALL BE ASTM-139, GRADE B.
10. ALL WATERLINES IN CASING SHALL BE A MINIMUM CLASS 52 DUCTILE IRON WITH M.J. BELLS AND AN APPROVED JOINT RESTRAINT DEVICE AT EACH M.J. CONNECTION. MINIMUM 3 JOINTS OUTSIDE EACH END OF CASING SHALL BE M.J. DUCTILE IRON WITH RESTRAINED JOINTS.

DATE JAN. 2008	CASING DETAIL FOR WATER LINES & SEWER FORCE MAINS	DRWG. NO.
REVISIONS		CAS-4

1 CASING DETAIL FOR WATER LINES & SEWER FORCE MAINS
No Scale

PRINCE GEORGE COUNTY
DEPARTMENT OF PUBLIC UTILITIES

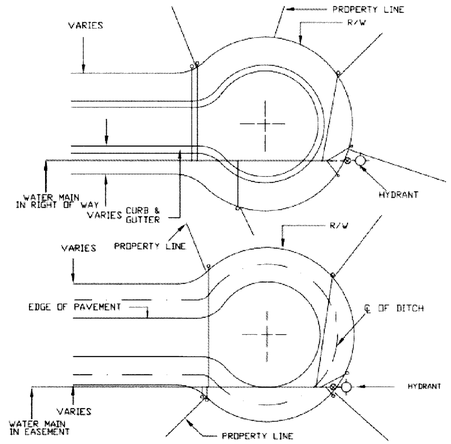

NOTES:
1. WHERE A DITCH EXISTS OR PROPOSED HYDRANT IS TO BE PLACED BETWEEN THE DITCH AND EDGE OF PAVEMENT ON LEVEL GROUND. IF THIS IS NOT POSSIBLE, THE UTILITY CONSTRUCTION INSPECTOR MUST BE CONSULTED. HYDRANT SHOULD BE 1' IN FRONT OF PROPERTY PIN OR BEYOND DITCH, MINIMUM 3.5' COVER UNDER DITCH.
2. IN THE EVENT THAT THE WATER SERVICES AND BOXES CANNOT BE ARRANGED AS REFLECTED IN THIS DETAIL, AT LEAST 10 FEET HORIZONTAL SEPARATION IS REQUIRED BETWEEN THE WATER METER BOX/SERVICE LINE AND HYDRANT

DATE JAN. 2008	TYPICAL LOCATION OF WATER MAIN AND SERVICES IN CUL-DE-SAC	DRWG. NO.
REVISIONS		WAT-5

2 TYPICAL LOCATION OF WATER MAIN AND SERVICES IN CUL-DE-SAC
No Scale

PRINCE GEORGE COUNTY
DEPARTMENT OF PUBLIC UTILITIES

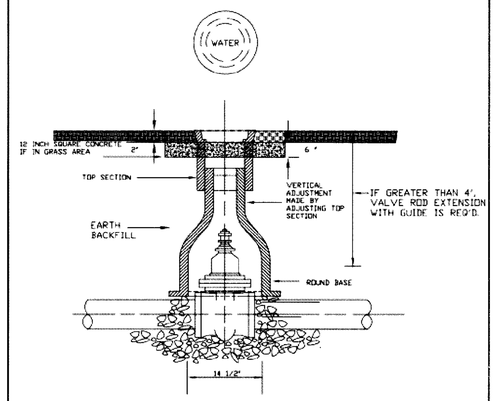

USE STANDARD DESIGNED VALVE BOX OF THE APPROPRIATE LENGTH (HEIGHT) UTILIZING APPROVED MANUFACTURERS OF VALVE BOX APPURTENANCES.

DATE JAN. 2008	SMALL VALVE BOX	DRWG. NO.
REVISIONS		WAT-7

3 SMALL VALVE BOX
No Scale

PRINCE GEORGE COUNTY
DEPARTMENT OF PUBLIC UTILITIES

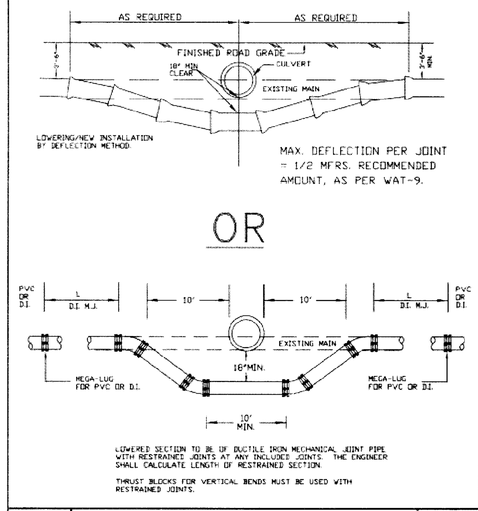

LOWERED SECTION TO BE OF DUCTILE IRON MECHANICAL JOINT PIPE WITH RESTRAINED JOINTS AT ANY INCLUDED JOINTS. THE ENGINEER SHALL CALCULATE LENGTH OF RESTRAINED SECTION.

THRUST BLOCKS FOR VERTICAL BENDS MUST BE USED WITH RESTRAINED JOINTS.

DATE JAN. 2008	LOWERING WATER MAIN OR NEW INSTALLATION	DRWG. NO.
REVISIONS		WAT-8

4 LOWERING WATER MAIN OR NEW INSTALLATION
No Scale

PRINCE GEORGE COUNTY
DEPARTMENT OF PUBLIC UTILITIES

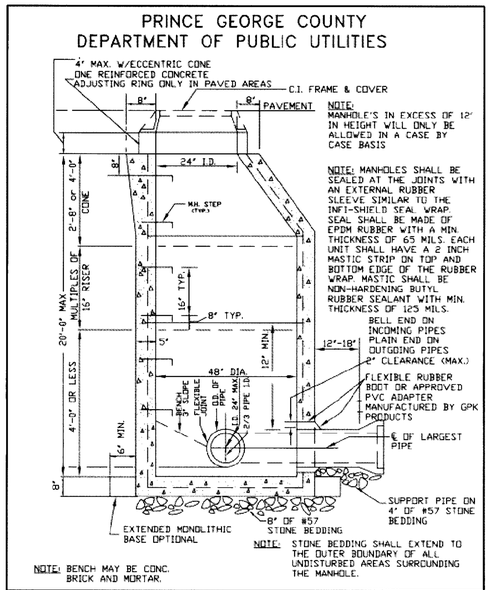

NOTE: MANHOLE'S IN EXCESS OF 12' IN HEIGHT WILL ONLY BE ALLOWED IN A CASE BY CASE BASIS

NOTE: MANHOLES SHALL BE SEALED AT THE JOINTS WITH AN EXTERNAL RUBBER SLEEVE SIMILAR TO THE INFI-SHIELD SEAL WRAP. SEAL SHALL BE MADE OF EPDM RUBBER WITH A MIN. THICKNESS OF 65 MILS. EACH UNIT SHALL HAVE A 2 INCH MASTIC STRIP ON TOP AND BOTTOM EDGE OF THE RUBBER WRAP. MASTIC SHALL BE NON-HARDENING BUTYL RUBBER SEALANT WITH MIN. THICKNESS OF 125 MILS.

BELL END ON INCOMING PIPES
PLAIN END ON OUTGOING PIPES
2" CLEARANCE (MAX.)

FLEXIBLE RUBBER BOOT OR APPROVED PVC ADAPTER MANUFACTURED BY GPK PRODUCTS

NOTE: BENCH MAY BE CONC. BRICK AND MORTAR.

NOTE: STONE BEDDING SHALL EXTEND TO THE OUTER BOUNDARY OF ALL UNDISTURBED AREAS SURROUNDING THE MANHOLE.

DATE JAN. 2008	STANDARD PRECAST CONCRETE MANHOLE SEWERS 8" TO 24" LOCATED IN PAVED AREAS	DRWG. NO.
REVISIONS		MAN-2

4 STANDARD PRECAST CONCRETE MANHOLE - IN PAVED AREAS
No Scale

PRINCE GEORGE COUNTY
DEPARTMENT OF PUBLIC UTILITIES

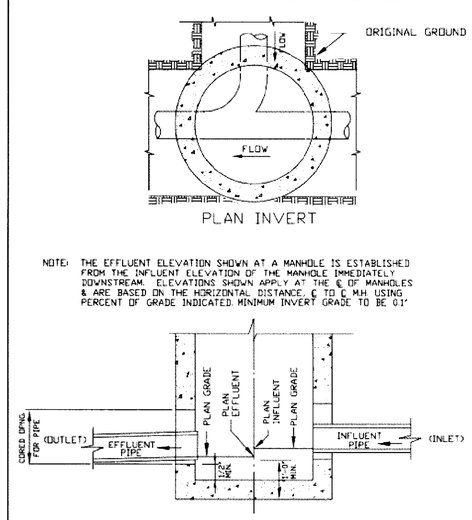

NOTE: THE EFFLUENT ELEVATION SHOWN AT A MANHOLE IS ESTABLISHED FROM THE INFLUENT ELEVATION OF THE MANHOLE IMMEDIATELY DOWNSTREAM. ELEVATIONS SHOWN APPLY AT THE ℄ OF MANHOLES & ARE BASED ON THE HORIZONTAL DISTANCE, ℄ TO ℄ MH. USING PERCENT OF GRADE INDICATED. MINIMUM INVERT GRADE TO BE 0.1'

DATE JAN. 2008	STANDARD INVERT DETAILS	DRWG. NO.
REVISIONS		MAN-9

6 STANDARD INVERT DETAILS
No Scale

PRINCE GEORGE COUNTY
DEPARTMENT OF PUBLIC UTILITIES

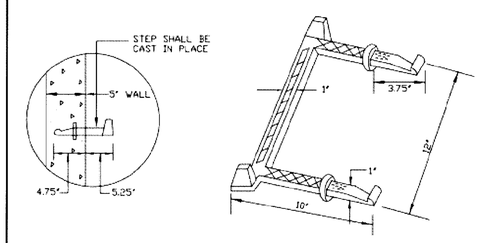

STEP SHALL BE MADE WITH 3/8" STEEL REINFORCING BAR ENCAPSULATED IN POLYPROPYLENE PLASTIC.

DATE JAN. 2008	TYPICAL MANHOLE STEP	DRWG. NO.
REVISIONS		MAN-14

7 TYPICAL MANHOLE STEP
No Scale

PRINCE GEORGE COUNTY
DEPARTMENT OF PUBLIC UTILITIES

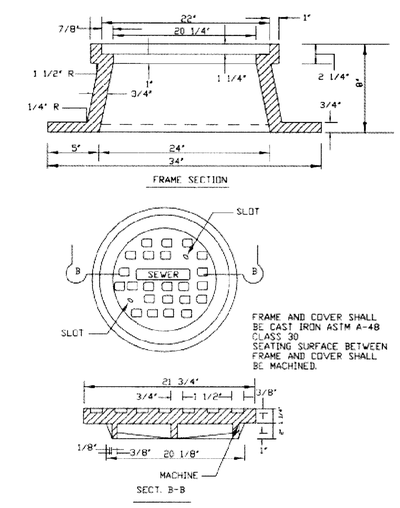

FRAME AND COVER SHALL BE CAST IRON ASTM A-48 CLASS 30. SEATING SURFACE BETWEEN FRAME AND COVER SHALL BE MACHINED.

DATE JAN. 2008	STANDARD MANHOLE FRAME & COVER	DRWG. NO.
REVISIONS		MAN-11

8 STANDARD MANHOLE FRAME & COVER
No Scale

sekivsolutions
OPTIMIZING YOUR DEVELOPMENT WORLD
14207 POND CHASE PLACE | MIDLOTHIAN, VA | 23113
TELEPHONE NO. 804.938.8864 | www.sekivsolutions.com

QUALITY ASSURANCE : STUART LITTLE
PROJECT MANAGER : CHRIS THOMPSON
PROJECT NO. : 10106
SCALE : AS SHOWN

COMMONWEALTH OF VIRGINIA
Stuart G. Little
Lic. No. 39974
04/7/14
PROFESSIONAL ENGINEER

DATE : APRIL 7, 2014

REVISION BLOCK

DATE	DESCRIPTION
-	-

MWC DEVELOPMENT, LLC
P.O. BOX 694
PRINCE GEORGE, VA 23875
CONTACT: KRIS CUTLER

TINSLEY CHARTER SUBDIVISION - SECTIONS 6, 7 AND 8

UTILITY DETAILS

SHEET NO.
C6.6