TEMPORARY SEDIMENT BASIN 1

SEDIMENT BASIN 1 SCHEMATIC ELEVATIONS

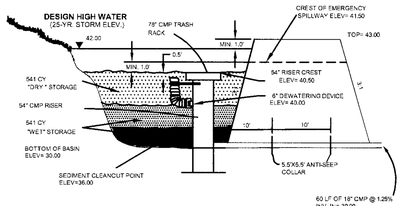

DESIGN ELEVATIONS WITH EMERGENCY SPILLWAY

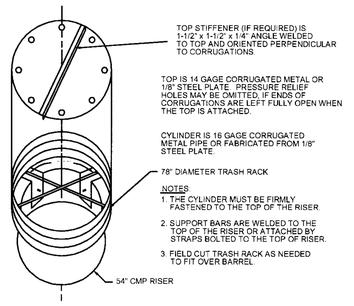

TRASH RACK DETAIL
N.T.S.

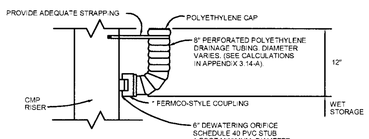

RECOMMENDED DEWATERING SYSTEM FOR SEDIMENT BASINS
NO SCALE

NOTE: WITH CONCRETE RISER, USE PVC SCHEDULE 40 STUB FOR DEWATERING ORIFICE.
* DRAINAGE TUBING SHALL COMPLY WITH ASTM F667 AND AASHTO M294

EXCAVATED EARTH SPILLWAY

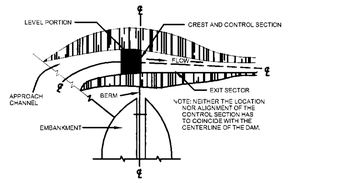

PLAN VIEW

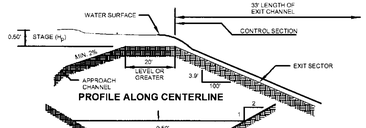

PROFILE ALONG CENTERLINE

CROSS-SECTION AT CONTROL SECTION

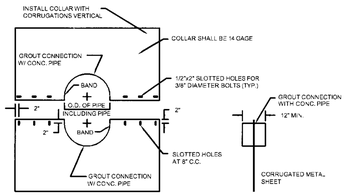

ELEVATION OF UNASSEMBLED COLLAR **END SECTION**

NOTES FOR COLLAR:

1. UNASSEMBLED COLLARS SHALL BE MARKED BY PAINTING OR TAGGING TO IDENTIFY MATCHING PAIRS.
2. THE LAP BETWEEN THE TWO HALF SECTIONS AND BETWEEN THE PIPE AND CONNECTING BAND SHALL BE CAULKED WITH ASPHALT MASTIC AT TIME OF INSTALLATION.

CORRUGATED METAL ANTI-SEEP COLLAR DETAIL
NO SCALE

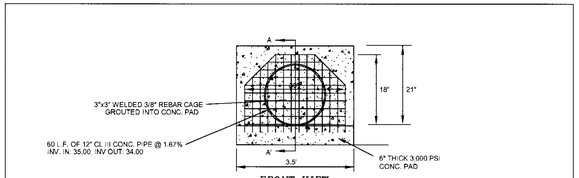

FRONT VIEW

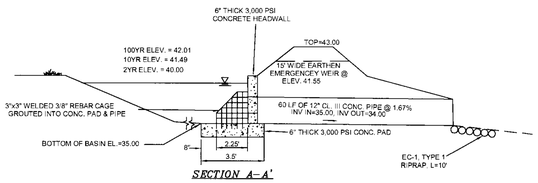

SECTION A–A'

PERMANENT STORMWATER MANAGEMENT BASIN 1 DETAIL
NO SCALE

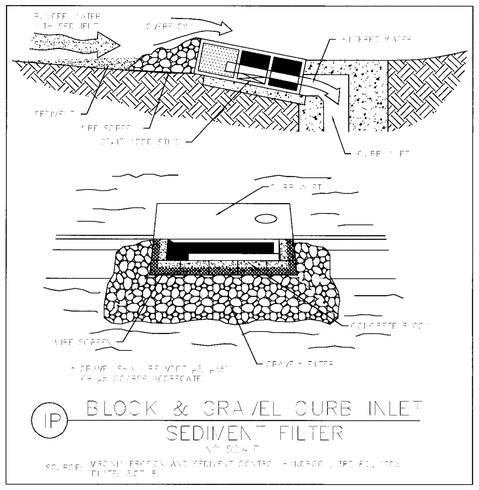

BLOCK & GRAVEL CURB INLET SEDIMENT FILTER
NO SCALE

TEMPORARY SEDIMENT BASIN 2

SEDIMENT BASIN 2 SCHEMATIC ELEVATIONS

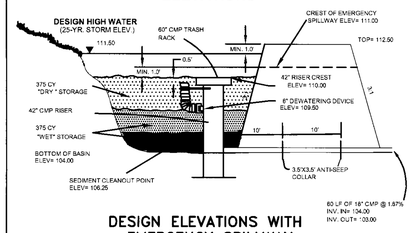

DESIGN ELEVATIONS WITH EMERGENCY SPILLWAY

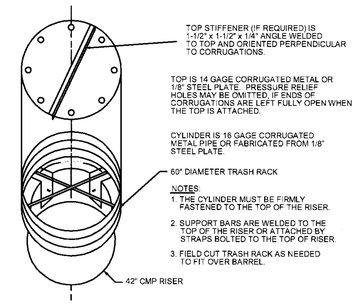

TRASH RACK DETAIL
N.T.S.

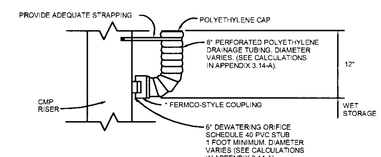

RECOMMENDED DEWATERING SYSTEM FOR SEDIMENT BASINS
NO SCALE

NOTE: WITH CONCRETE RISER, USE PVC SCHEDULE 40 STUB FOR DEWATERING ORIFICE.
* DRAINAGE TUBING SHALL COMPLY WITH ASTM F667 AND AASHTO M294

EXCAVATED EARTH SPILLWAY

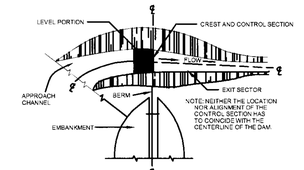

PLAN VIEW

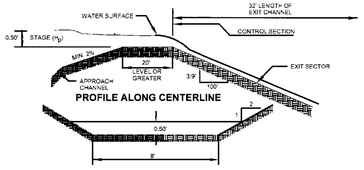

PROFILE ALONG CENTERLINE

CROSS-SECTION AT CONTROL SECTION

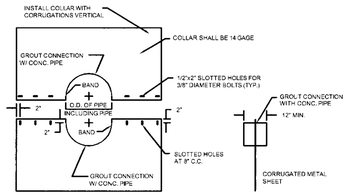

ELEVATION OF UNASSEMBLED COLLAR **END SECTION**

NOTES FOR COLLAR:

1. UNASSEMBLED COLLARS SHALL BE MARKED BY PAINTING OR TAGGING TO IDENTIFY MATCHING PAIRS.
2. THE LAP BETWEEN THE TWO HALF SECTIONS AND BETWEEN THE PIPE AND CONNECTING BAND SHALL BE CAULKED WITH ASPHALT MASTIC AT TIME OF INSTALLATION.

CORRUGATED METAL ANTI-SEEP COLLAR DETAIL
NO SCALE

4VAC50–30–40. MINIMUM STANDARDS

An erosion and sediment control program adopted by a district or locality must be consistent with the following criteria, techniques and methods:

1. Permanent or temporary soil stabilization shall be applied to denuded areas within seven days after final grade is reached on any portion of the site. Temporary soil stabilization shall be applied within seven days to denuded areas that may not be at final grade but will remain dormant for longer than 30 days. Permanent stabilization shall be applied to areas that are to be left dormant for more than one year.
2. During construction of the project, soil stock piles and borrow areas shall be stabilized or protected with sediment trapping measures. The applicant is responsible for the temporary protection and permanent stabilization of all soil stockpiles on site as well as borrow areas and soil intentionally transported from the project site.
3. A permanent vegetative cover shall be established on denuded areas not otherwise permanently stabilized. Permanent vegetation shall not be considered established until a ground cover is achieved that is uniform, mature enough to survive and will inhibit erosion.
4. Sediment basins and traps, perimeter dikes, sediment barriers and other measures intended to trap sediment shall be constructed as a first step in any land–disturbing activity and shall be made functional before upslope land disturbance takes place.
5. Stabilization measures shall be applied to earthen structures such as dams, dikes and diversions immediately after installation.
6. Sediment traps and sediment basins shall be designed and constructed based upon the total drainage area to be served by the trap or basin.
   A) The minimum storage capacity of a sediment trap shall be 134 cubic yards per acre of drainage area and the trap shall only control drainage areas less than three acres.
   B) Surface runoff from disturbed areas that is comprised of flow from drainage areas greater than or equal to three acres shall be controlled by a sediment basin. The minimum storage capacity of a sediment basin shall be 134 cubic yards per acre of drainage area. The outfall system shall, at a minimum, maintain the structural integrity of the basin during a 25–year storm of 24–hour duration. Runoff coefficients used in runoff calculations shall correspond to a bare earth condition or those conditions expected to exist while the sediment basin is utilized.
7. Cut and fill slopes shall be designed and constructed in a manner that will minimize erosion. Slopes that are found to be eroding excessively within one year of permanent stabilization shall be provided with additional slope stabilizing measures until the problem is corrected.
8. Concentrated runoff shall not flow down cut or fill slopes unless contained within an adequate temporary or permanent channel, flume or slope drain structure.
9. Whenever water seeps from a slope face, adequate drainage or other protection shall be provided.
10. All storm sewer inlets that are made operable during construction shall be protected so that sediment–laden water cannot enter the conveyance system without first being filtered or otherwise treated to remove sediment.
11. Before newly constructed stormwater conveyance channels or pipes are made operational, adequate outlet protection and any required temporary or permanent channel lining shall be installed in both the conveyance channel and receiving channel.
12. When work in a live watercourse is performed, precautions shall be taken to minimize encroachment, control sediment transport and stabilize the work area to the greatest extent possible during construction. Nonerodible material shall be used for the construction of causeways and cofferdams. Earthen fill may be used for these structures if armored by nonerodible cover materials.
13. When a live watercourse must be crossed by construction vehicles more than twice in any six–month period, a temporary vehicular stream crossing constructed of nonerodible material shall be provided.
14. All applicable federal, state and local chapters pertaining to working in or crossing live watercourses shall be met.
15. The bed and banks of a watercourse shall be stabilized immediately after work in the watercourse is completed.
16. Underground utility lines shall be installed in accordance with the following standards in addition to other applicable criteria:
    A) No more than 500 linear feet of trench may be opened at one time.
    B) Excavated material shall be placed on the uphill side of trenches.
    C) Effluent from dewatering operations shall be filtered or passed through an approved sediment trapping device, or both, and discharged in a manner that does not adversely affect flowing streams or off–site property.
    D) Material used for backfilling trenches shall be properly compacted in order to minimize erosion and promote stabilization.
    E) Restabilization shall be accomplished in accordance with this chapter.
    F) Applicable safety chapters shall be complied with.
17. Where construction vehicle access routes intersect paved or public roads, provisions shall be made to minimize the transport of sediment by vehicular tracking onto the paved surface. Where sediment is transported onto a paved or public road surface, the road surface shall be cleaned thoroughly at the end of each day. Sediment shall be removed from the roads by shoveling or sweeping and transported to a sediment control disposal area. Street washing shall be allowed only after sediment is removed in this manner. This provision shall apply to individual development lots as well as to larger land–disturbing activities.
18. All temporary erosion and sediment control measures shall be removed within 30 days after final site stabilization or after the temporary measures are no longer needed, unless otherwise authorized by the local program authority. Trapped sediment and the disturbed soil areas resulting from the disposition of temporary measures shall be permanently stabilized to prevent further erosion and sedimentation.
19. Properties and waterways downstream from development sites shall be protected from sediment deposition, erosion and damage due to increases in volume, velocity and peak flow rate of stormwater runoff for the stated frequency storm of 24–hour duration in accordance with the following standards and criteria:
    A) Concentrated stormwater runoff leaving a development site shall be discharged directly into an adequate natural or man–made receiving channel, pipe or storm sewer system. For those sites where runoff is discharged into a pipe or pipe system, downstream stability analyses at the outfall of the pipe or pipe system shall be performed.
    B) Adequacy of all channels and pipes shall be verified in the following manner:
    (1) The applicant shall demonstrate that the total drainage area to the point of analysis within the channel is one hundred times greater than the contributing drainage area of the project in question; or
    (2) (a) Natural channels shall be analyzed by the use of a two–year storm to verify that stormwater will not overtop channel banks nor cause erosion of channel bed or banks.
    (b) All previously constructed man–made channels shall be analyzed by the use of a ten–year storm to verify that stormwater will not overtop its banks and by the use of a Two–year storm to demonstrate that stormwater will not cause erosion of channel bed or banks; and
    (c) Pipes and storm sewer systems shall be analyzed by the use of a ten–year storm to verify that stormwater will be contained within the pipe or system.
    C) If existing natural receiving channels or previously constructed man–made channels or pipes are not adequate, the applicant shall:
    (1) Improve the channels to a condition where a ten–year storm will not overtop the banks and a two–year storm will not cause erosion to channel the bed or banks; or
    (2) Improve the pipe or pipe system to a condition where the ten–year storm is contained within the appurtenances;
    (3) Develop a site design that will not cause the pre–development peak runoff rate from a two–year storm to increase when runoff outfalls into a natural channel or will not cause the pre–development peak runoff rate from a ten–year storm to increase when runoff outfalls into a man–made channel; or
    (4) Provide a combination of channel improvement, stormwater detention or other measures which is satisfactory to the plan approving authority to prevent downstream erosion.
    d. The applicant shall provide evidence of permission to make the improvements.
    e. All hydrologic analyses shall be based on the existing watershed characteristics and the ultimate development condition of the subject project.
    f. If the applicant chooses an option that includes stormwater detention, he shall obtain approval from the locality of a plan for maintenance of the detention facilities. The plan shall set forth the maintenance requirements of the facility and the person responsible for performing the maintenance.
    g. Outfall from a detention facility shall be discharged to a receiving channel, and energy dissipators shall be placed at the outfall of all detention facilities as necessary to provide a stabilized transition from the facility to the receiving channel.
    h. All on–site channels must be verified to be adequate.
    i. Increased volumes of sheet flows that may cause erosion or sedimentation on adjacent property shall be diverted to a stable outlet, adequate channel, pipe or pipe system, or to a detention facility.
    j. In applying these stormwater management criteria, individual lots or parcels in a residential, commercial or industrial development shall not be considered to be separate development projects. Instead, the development, as a whole, shall be considered to be a single development project. Hydrologic parameters that reflect the ultimate development condition shall be used in all engineering calculations.
    k. All measures used to protect properties and waterways shall be employed in a manner which minimizes impacts on the physical, chemical and biological integrity of rivers, streams and other waters of the state.

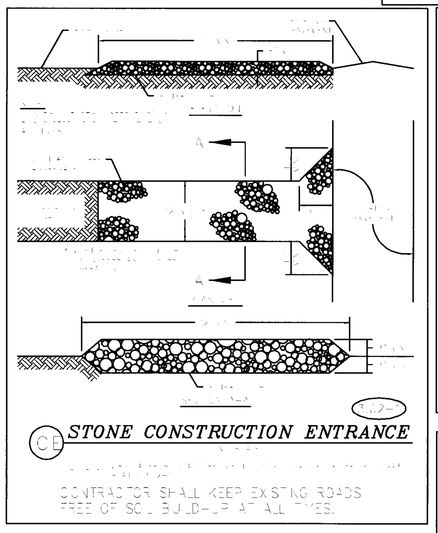

STONE CONSTRUCTION ENTRANCE

CONTRACTOR SHALL KEEP EXISTING ROADS FREE OF SOIL BUILD-UP AT ALL TIMES.

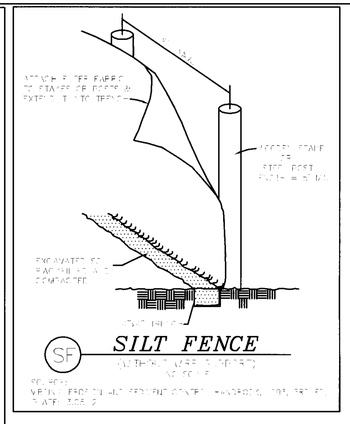

SILT FENCE

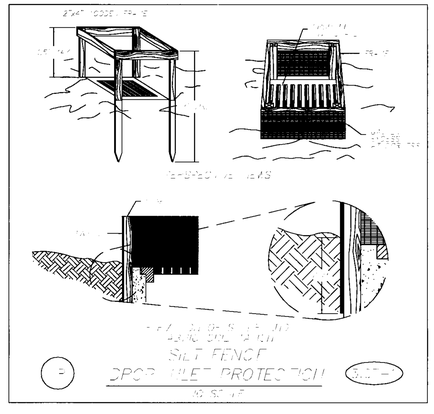

SILT FENCE
DROP INLET PROTECTION

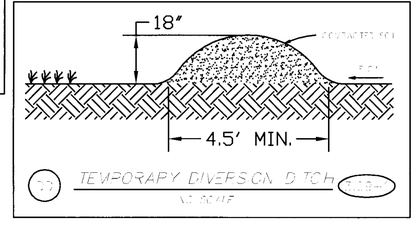

TEMPORARY DIVERSION DITCH

COMMONWEALTH OF VIRGINIA
KATHLEEN N. HALPAUS
Lic. No. 45244
PROFESSIONAL ENGINEER

THIS DRAWING PREPARED AT THE
TRI-CITIES OFFICE
4260 Crossings Blvd | Prince George, VA 23875
TEL 804.458.8685 FAX 804.751.0798 www.timmons.com

YOUR VISION ACHIEVED THROUGH OURS.

Site Development | Residential | Infrastructure | Technology

DATE	REVISION DESCRIPTION
5-6-10	COUNTY COMMENTS

DATE	23 DEC 2009
DRAWN BY	R. ROBBINS
DESIGNED BY	K. HALPAUS
CHECKED BY	D. JOHNSON
SCALE	NONE

TIMMONS GROUP

THE MEADOWS AT PRINCE GEORGE - SECTION 6
BLAND DISTRICT - PRINCE GEORGE COUNTY - VIRGINIA
EROSION CONTROL NOTES & DETAILS

JOB NO. 28124
SHEET NO. C4.2

These plans and associated documents are the exclusive property of TIMMONS GROUP and may not be reproduced in whole or in part and shall not be used for any purpose whatsoever, inclusive, but not limited to construction, bidding, and/or construction staking without the express written consent of TIMMONS GROUP.