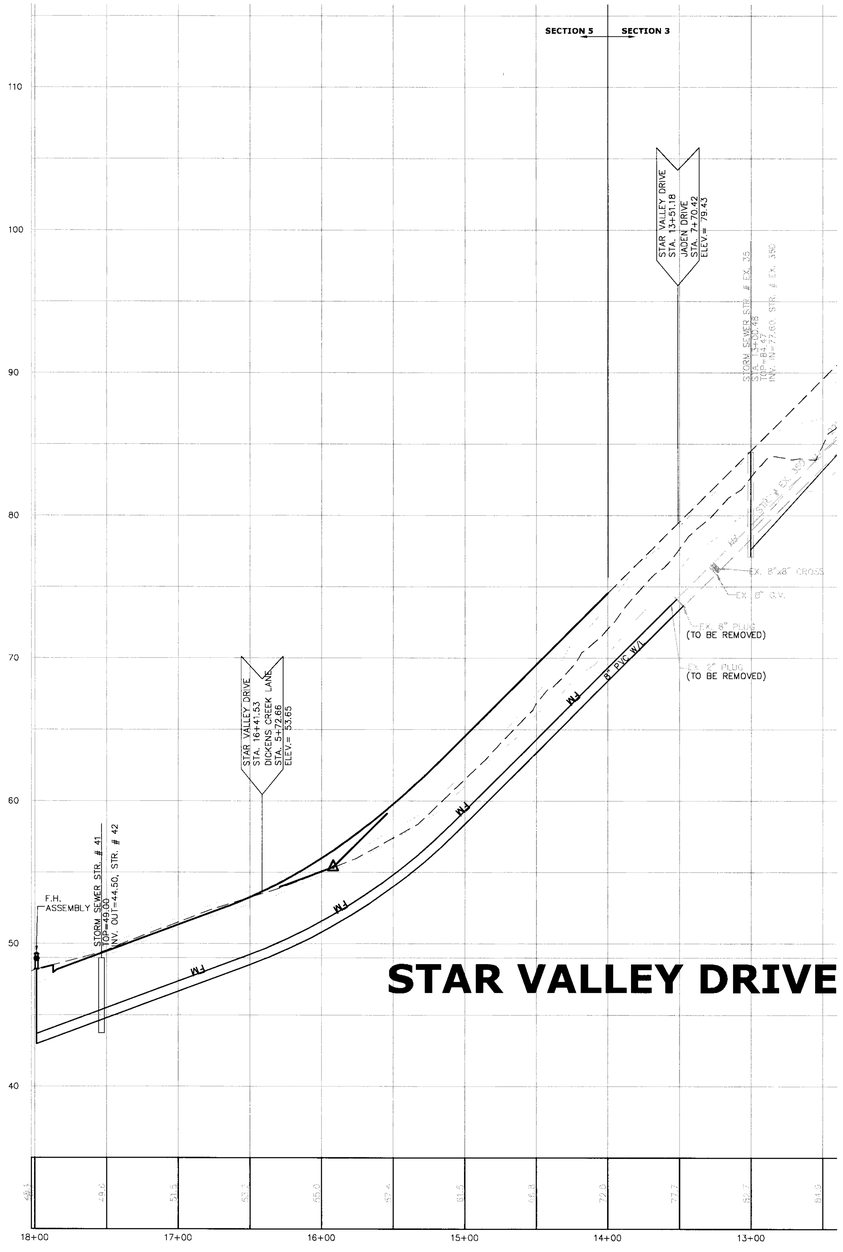

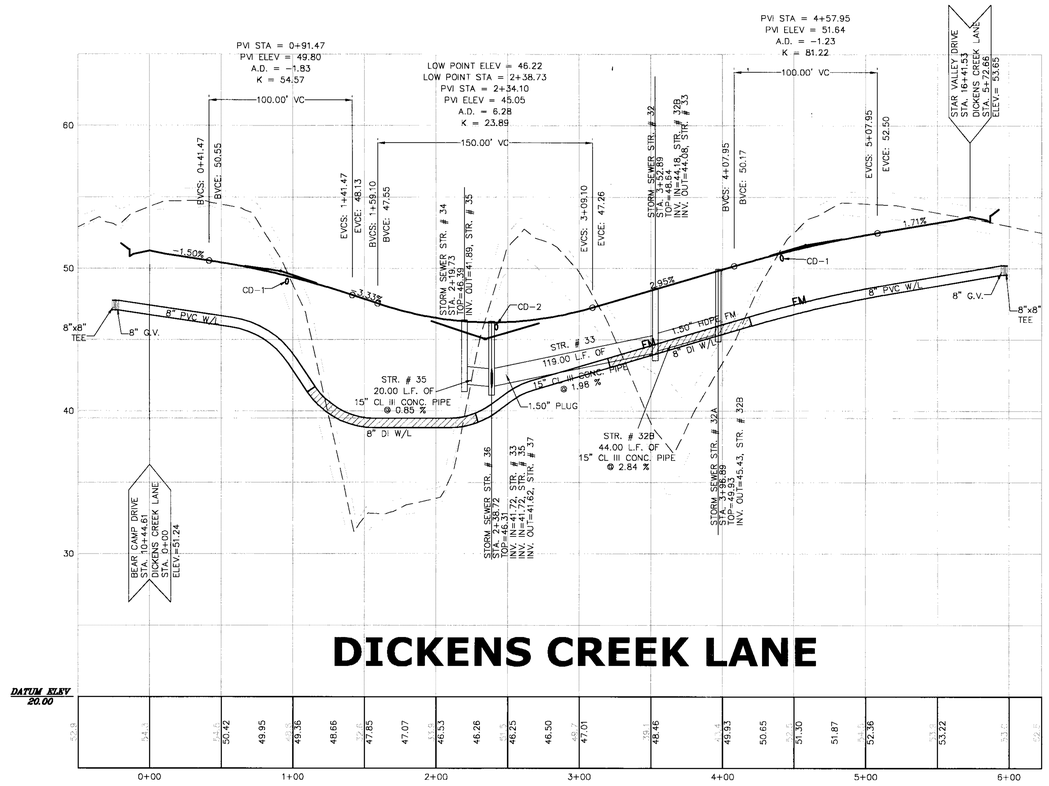

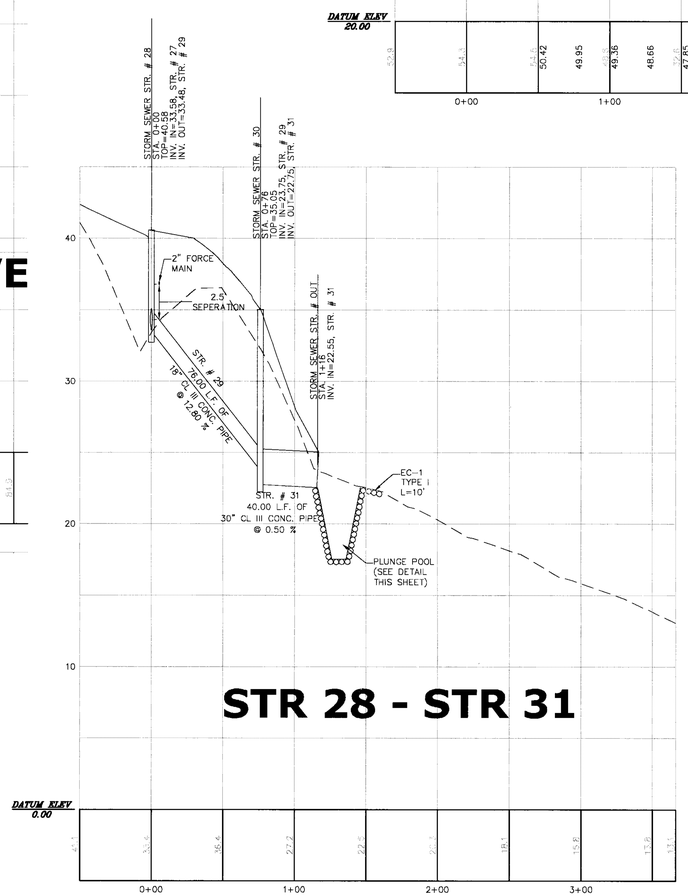

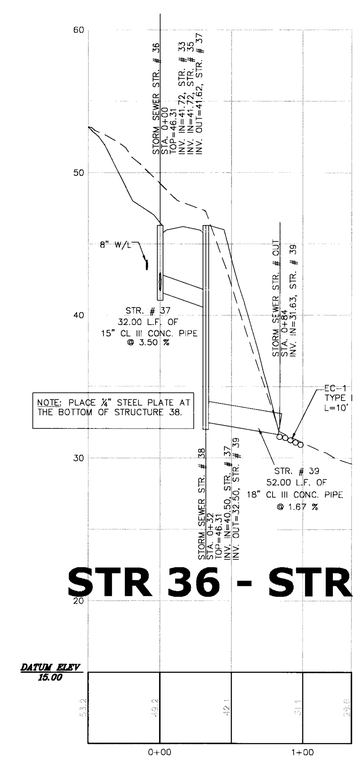

STAR VALLEY DRIVE

DICKENS CREEK LANE

STR 28 - STR 31

STR 36 - STR 39

KEY

LEGEND:

25' LEFT
EXIST. GROUND @ C/L
25' RIGHT
ROAD GRADE @ C/L

SCALE:

HORIZONTAL: 1"=50'
VERTICAL: 1"=5'

NOTE:
CONTRACTOR IS TO VERIFY LOCATION OF EXISTING UTILITIES, BOTH HORIZONTALLY & VERTICALLY, PRIOR TO THE BEGINNING OF CONSTRUCTION.

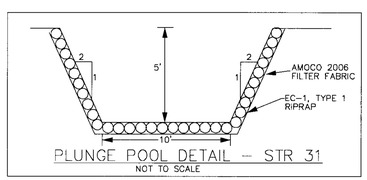

PLUNGE POOL DETAIL – STR 31
NOT TO SCALE

COMMONWEALTH OF VIRGINIA
DERRICK A. JOHNSON
Lic. No. 24761
5-23-08
PROFESSIONAL ENGINEER

THIS DRAWING PREPARED AT THE
TRI-CITIES OFFICE
4260 Crossings Blvd | Prince George, VA 23875
TEL 804.458.8685 FAX 804.751.0798 www.timmons.com

YOUR VISION ACHIEVED THROUGH OURS.

Site Development | Residential | Infrastructure | Technology

DATE	REVISION DESCRIPTION
18 MARCH 08	COUNTY COMMENTS
23 MAY 08	COUNTY & VDOT COMMENTS

DATE	21 JAN 2008
DRAWN BY	K. HALPAUS
DESIGNED BY	K. HALPAUS
CHECKED BY	D. JOHNSON
SCALE	HORIZ: 1"=50' VERT: 1"=5'

TIMMONS GROUP

THE MEADOWS AT PRINCE GEORGE - SECTION 5

BLAND DISTRICT - PRINCE GOERGE COUNTY - VIRGINIA

PROFILES

JOB NO. 25179

SHEET NO. C3.1

These plans and associated documents are the exclusive property of TIMMONS GROUP and may not be reproduced in whole or in part, and shall not be used for any purpose whatsoever, inclusive, but not limited to construction, bidding, and/or construction staking without the express written consent of TIMMONS GROUP.