ELECTRICAL DISTRIBUTION

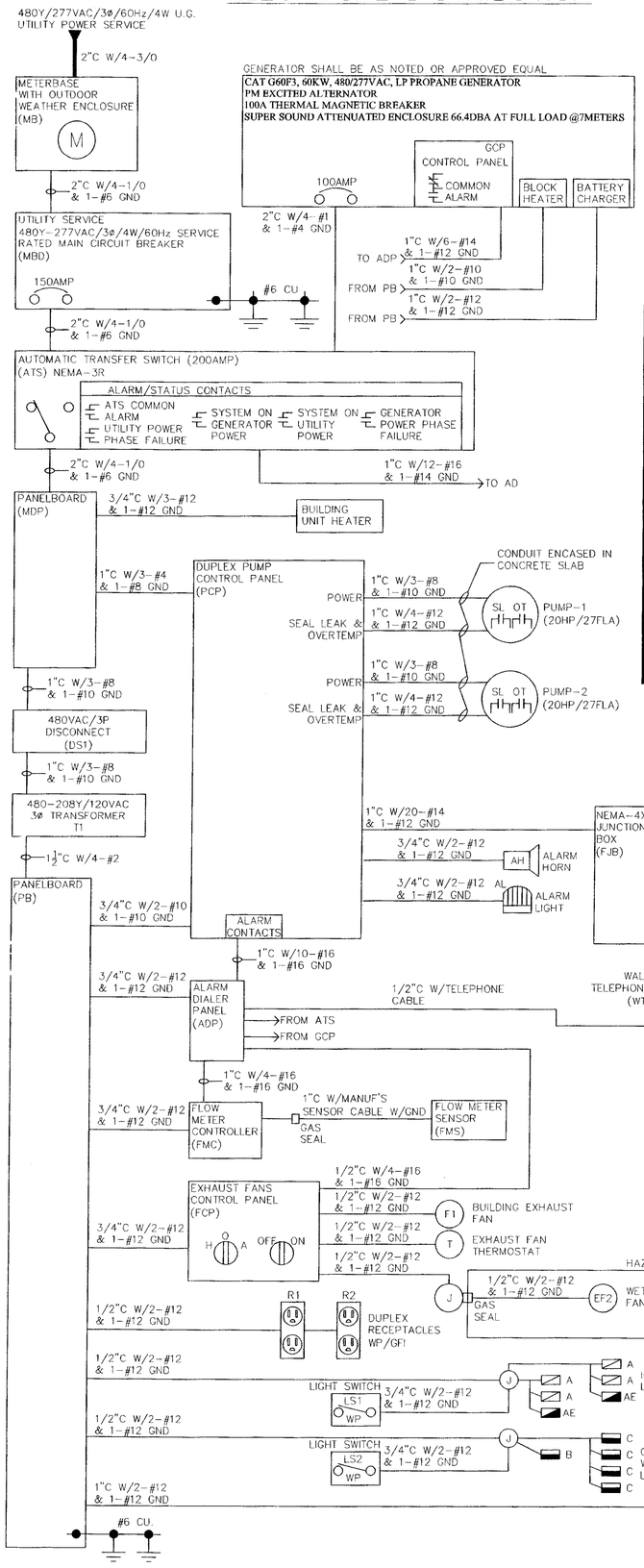

ABBREVIATIONS:

(A Number Designates the Unit where applicable)

- ADP – ALARM DIALER PANEL
- ATS – AUTOMATIC TRANSFER SWITCH
- DS – DISCONNECT SWITCH
- EF – EXHAUST FAN
- FCP – EXHAUST FAN CONTROL PANEL
- FM – FLOW METER
- FMC – FLOW METER CONTROLLER
- FMS – FLOW METER SENSOR
- GCP – GENERATOR CONTROL PANEL
- J – JUNCTION BOX
- FJB – FLOAT JUNCTION BOX
- LS – LIGHT SWITCH
- MB – UTILITY METERBASE/CT CABINET
- MBD – MAIN BREAKER DISCONNECT SWITCH
- MDP – 480Y/277 DISTRIBUTION PANELBOARD
- P – PUMP
- PB – 208Y/120 DISTRIBUTION PANELBOARD
- PCP – DUPLEX PUMP CONTROL PANEL
- R – RECEPTACLE
- T – THERMOSTAT
- TJB – TELEPHONE COMPANY JUNCTION BOX
- TX – TRANSFORMER
- UG – UNDER GROUND
- UH – UNIT HEATER

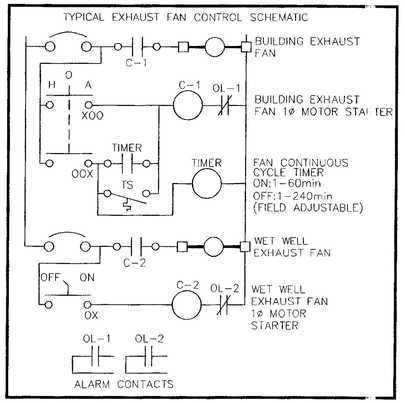

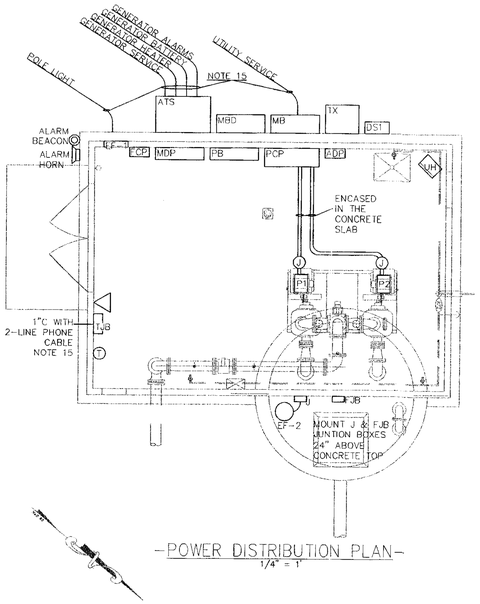

-POWER DISTRIBUTION PLAN-
1/4" = 1'

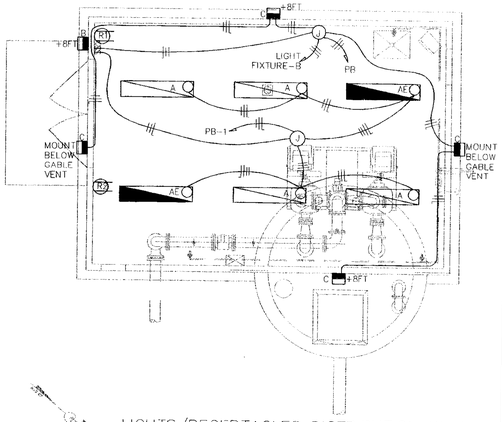

--LIGHTS/RECEPTACLES DISTRIBUTION PLAN--
1/4" = 1'

PANELBOARD: MDP MOUNTING: SURFACE ENCLOSURE: NEMA-12, 30CKT MINIMUM					BOLT-ON BREAKERS				MAIN BUSS: 200AMP, COPPER VOLTAGE: 480Y/277VAC,3ø,4W,60Hz INTERIOR: 150AMP MAIN BREAKER				
LOAD DESCRIPTION	CB SIZE	WIRE AWG	# POLE	CKT NO	AMPS/PHASE øA	øB	øC	CKT NO	# POLE	WIRE AWG	CB SIZE	LOAD DESCRIPTION
DUPLEX PUMP CONTROL PANEL SUPPLY WITH BREAKER LOCKOUT DEVICE	80	4	3	1	54			2	3	8	50	TRANSFORMER, 30KVA 480-208Y/120VAC,3ø SUPPLY WITH BREAKER LOCKOUT DEVICE
				3	36	54		4				
				5		36	54	6				
SPACE WITH PROVISIONS	--	--	--	7	--		36	8	3	12	15	BUILDING UNIT HEATER (5KW/3ø) SUPPLY WITH BREAKER LOCKOUT DEVICE
				9	6	--		10				
SPACE WITH PROVISIONS	--	--	--	11		6	--	12				
SPACE WITH PROVISIONS	--	--	--	13	--		6	14	--	--	--	SPACE WITH PROVISIONS
				15	--	--		16	--	--	--	SPACE WITH PROVISIONS
SPACE WITH PROVISIONS	--	--	--	17			--	18	--	--	--	SPACE WITH PROVISIONS
KAIC RATING: AS REQUIRED					96	96	96	TOTAL AMPS				

PANELBOARD: PB, SERVICE RATED MOUNTING: SURFACE ENCLOSURE: NEMA-12, 30CKT MINIMUM					BOLT-ON BREAKERS				MAIN BUSS: 200AMP, COPPER VOLTAGE: 208Y/120VAC,3ø,4W,60Hz INTERIOR: 125AMP MAIN CIRCUIT BREAKER				
LOAD DESCRIPTION	CB SIZE	WIRE AWG	# POLE	CKT NO	AMPS/PHASE øA	øB	øC	CKT NO	# POLE	WIRE AWG	CB SIZE	*LOAD DESCRIPTION*
INSIDE LIGHTS	20	12	1	1	5			2	1	10	30	PUMP STATION CONTROL PANEL (PCP)
				3	20	17		4	1	12	20	GENERATOR BATTERY CHARGER
GENERATOR BLOCK HEATER (2KW)	25	10	1			5	9	6	1	12	20	EXHAUST FAN CONTROL PANEL (FCP)
OUTSIDE WALLPACK LIGHTS	20	12	1	5			8	8	1	12	20	SPARE BREAKER
SPARE BREAKER	20	12	1	7	--			10	1	--	20	ALARM DIALER PANEL (ADP)
FLOW METER CONTROLLER (FMC)	20	12	1	9		2		12	1	12	20	LIGHT POLE
RECEPTACLES (R1,R2,R3)	--	--	--	11		2	--	14	--	--	--	SPACE WITH PROVISIONS
SPACE WITH PROVISIONS	--	--	--	13	--		7	16	--	--	--	SPACE WITH PROVISIONS
SPACE WITH PROVISIONS	--	--	--	15		--		18	--	--	--	SPACE WITH PROVISIONS
SPACE WITH PROVISIONS	--	--	--	17		--	--					
KAIC RATING: AS REQUIRED					25	26	23	TOTAL AMPS				

LIGHTING FIXTURE SCHEDULE

FIXTURES SHALL BE AS NOTED OR APPROVED EQUAL

TYPE	QTY	MANUF.	CAT. NUMBER	LAMPS NO.	LAMPS WATTS	LAMPS TYPE	VOLTS
A	6	LITHONIA	DMW-2-40-AR-120-ES-STSL	2	40	T12	120VAC
AE	2	LITHONIA	DMW-2-40-AR-120-ES-EL-STSL	2	40	T12	120VAC
B	1	LITHONIA	TWAC-42TRT-120-LP1 WITH PHOTOCELL OPERATION	1	42	INC	120VAC
C	1	HUBBELL	PGS-A100H-128-1-PVLV	1	100	MH	120VAC
D	1	LITHONIA	LIGHT: KSF2-400M-R4SC-120-SF-SP09-PER-SCWA (2-LIGHT FIXTURES) POLE: SSS-20-5G-DM28-DDB-BC-SBC5-HHC	2	400	MH	120VAC

ELECTRICAL NOTES:

1. THE CONTRACTOR SHALL COORDINATE WITH THE UTILITY FOR THE EXTENSION OF THE POWER SERVICE TO THE PUMP STATION SITE AND INSTALL UTILITY SUPPLIED EQUIPMENT AS REQUIRED BY THE UTILITY. IN ADDITION, THE CONTRACTOR SHALL SUPPLY AND INSTALL THE CONDUIT/WIRE BETWEEN THE UTILITY TRANSFORMER AND THE SERVICE METERBASE.
2. PROVIDE AND INSTALL BONDING BUSHINGS ON ALL SERVICE CONNECTIONS AND GROUNDING LOCKNUTS ON ALL PANEL CONNECTORS.
3. PROVIDE AND INSTALL THE FOLLOWING LIGHTNING/SURGE ARRESTORS PER THE MANUFACTURER'S INSTALLATION INSTRUCTIONS AND RECOMMENDATIONS:
   a. PANEL'S MBD, MDP, PB: DELTA LA AND CA SERIES OR APPROVED EQUAL.
4. ALL ENCLOSURES INSTALLED UNDER THIS CONTRACT SHALL BE PAD LOCKABLE AND SHALL BE SUPPLIED WITH COMMON KEYED LOCKING DEVICES.
5. ALL WIRE INSTALLED UNDER THIS CONTRACT SHALL BE COPPER.
6. ALL EQUIPMENT SHALL BE INSTALLED IN ACCORDANCE WITH LOCAL CODES AND REGULATIONS.
7. ALL EQUIPMENT SHALL BE PROVIDED WITH LAMICOID NAMEPLATES (3/16" LETTERING MIN.).
8. CONTRACTOR SHALL SUPPLY ALL EQUIPMENT REQUIRED TO PROVIDE FOR A COMPLETE OPERATING SYSTEM.
9. CONTRACTOR SHALL COORDINATE WITH ALL EQUIPMENT SUPPLIERS TO ENSURE THAT ALL REQUIRED ALARM SIGNALS ARE PROVIDED IN A FORM COMPATIBLE WITH THE ALARM DIALER PANEL.
10. ALL PANELBOARD SCHEDULES SHALL REFLECT AS-BUILT CONDITIONS.
11. THE CONTRACTOR SHALL COORDINATE WITH THE OWNER AND THE LOCAL TELEPHONE COMPANY FOR THE EXTENSION AND INSTALLATION OF THE PROPER TELEPHONE SERVICE REQUIRED FOR THE TELEPHONE ALARM DIALER PANEL AND A WALL PHONE. THE CONTRACTOR SHALL SUPPLY AND INSTALL ALL EQUIPMENT, CONDUIT, WIRE AND CIRCUIT TESTING TO ENSURE A FULLY FUNCTIONAL PHONE SERVICE.
12. THE CONTRACTOR SHALL COORDINATE WITH THE UTILITY TO ENSURE THAT EACH PANELBOARD AND IT'S ASSOCIATED BREAKERS HAVE AN AIC RATING THAT IS EQUAL TO OR GREATER THAN THAT WHICH IS DELIVERABLE TO THE SITE.
13. ALL ELECTRICAL ENCLOSURES AND PANELBOARDS SHALL BE AS FOLLOWS UNLESS SPECIFICALLY NOTED OTHERWISE:
    a. UL508A LISTED FOR ENCLOSED INDUSTRIAL ENCLOSURES
    b. ENCLOSURES MOUNTED INSIDE: NEMA-12 MINIMUM.
    c. ENCLOSURES MOUNTED OUTSIDE: NEMA-3R MINIMUM.
    d. ALL ENCLOSURES SHALL BE PROVIDED WITH AMBIENT COMPENSATION AS REQUIRED BY THE INSTALLED EQUIPMENT. (ie. AIR CONDITIONER, HEATER, COOLING FANS, ETC.)
14. REFERENCE SPECIFICATION SECTION 11311 SUCTION LIFT PUMP STATION FOR OPERATIONAL AND COMPONENT REQUIREMENTS.
15. REFER TO CIVIL SITE PLAN FOR EQUIPMENT LOCATION AND DISTANCES.

ELECTRICAL LEGEND

ALL SYMBOLS MAY NOT BE USED ON THIS CONTRACT

- EXIT LIGHT – NO. DENOTES FACES
- JUNCTION BOX
- OUTSIDE WALL PACK LIGHT
- FLUORESCENT LIGHT
- FLUORESCENT LIGHT W/EMERGENCY BALLAST AND BATTERY PACK
- EMERG – EMERGENCY LIGHT
- PHOTOCELL
- +44" – WALL MOUNTED TOGGLE SWITCH – HEIGHT A.F.F.
- 3 – WALL MOUNTED TOGGLE SWITCH – NO. INDICATES 3-WAY, ETC.
- RECEPTACLE
- CONDUIT RUN (— — — ENCASED IN CONCRETE SLAB)
- INDICATES NO. OF WIRES (1-HOT,1-NEUTRAL & 1-GROUND)
- INDICATES A "HOMERUN" (3-HOTS & 1- GROUND)
- DISCONNECT SWITCH
- WALL MOUNTED TELEPHONE

COMMONWEALTH OF VIRGINIA
D. L. GLASSCOCK
No. 36309
1/17/06
PROFESSIONAL ENGINEER

VIRGINIA | NORTH CAROLINA | WEST VIRGINIA
THIS DRAWING PREPARED AT THE
CORPORATE OFFICE
711 N. Courthouse Road | Richmond, VA 23236-4099
TEL 804.794.3500 FAX 804.794.7839 www.timmons.com

YOUR VISION ACHIEVED THROUGH OURS.

Site Development | Residential | Infrastructure | Technology

REVISION DESCRIPTION	DATE
REVISED PER COMMENTS	1/17/06

DATE	11/11/05
DRAWN BY	D. GLASSCOCK
DESIGNED BY	D. GLASSCOCK
CHECKED BY	D. GLASSCOCK
SCALE	AS SHOWN

TIMMONS GROUP

THE MEADOWS
PRINCE GEORGE COUNTY, VA

ELECTRICAL ONE-LINE, DIAGRAMS AND NOTES

JOB NO. 21950-201

SHEET NO. E1

These plans and associated documents are the exclusive property of TIMMONS GROUP and may not be reproduced in whole or in part and shall not be used for any purpose whatsoever, including but not limited to construction, bidding, and/or construction staking without the express written consent of TIMMONS GROUP.