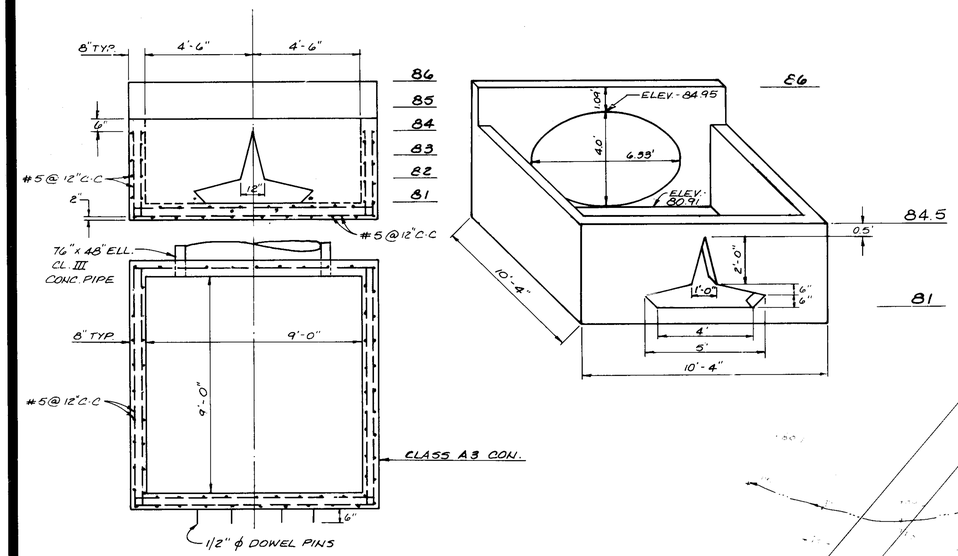

SCALE: 1" = 3'

WEIR BOX DETAILS

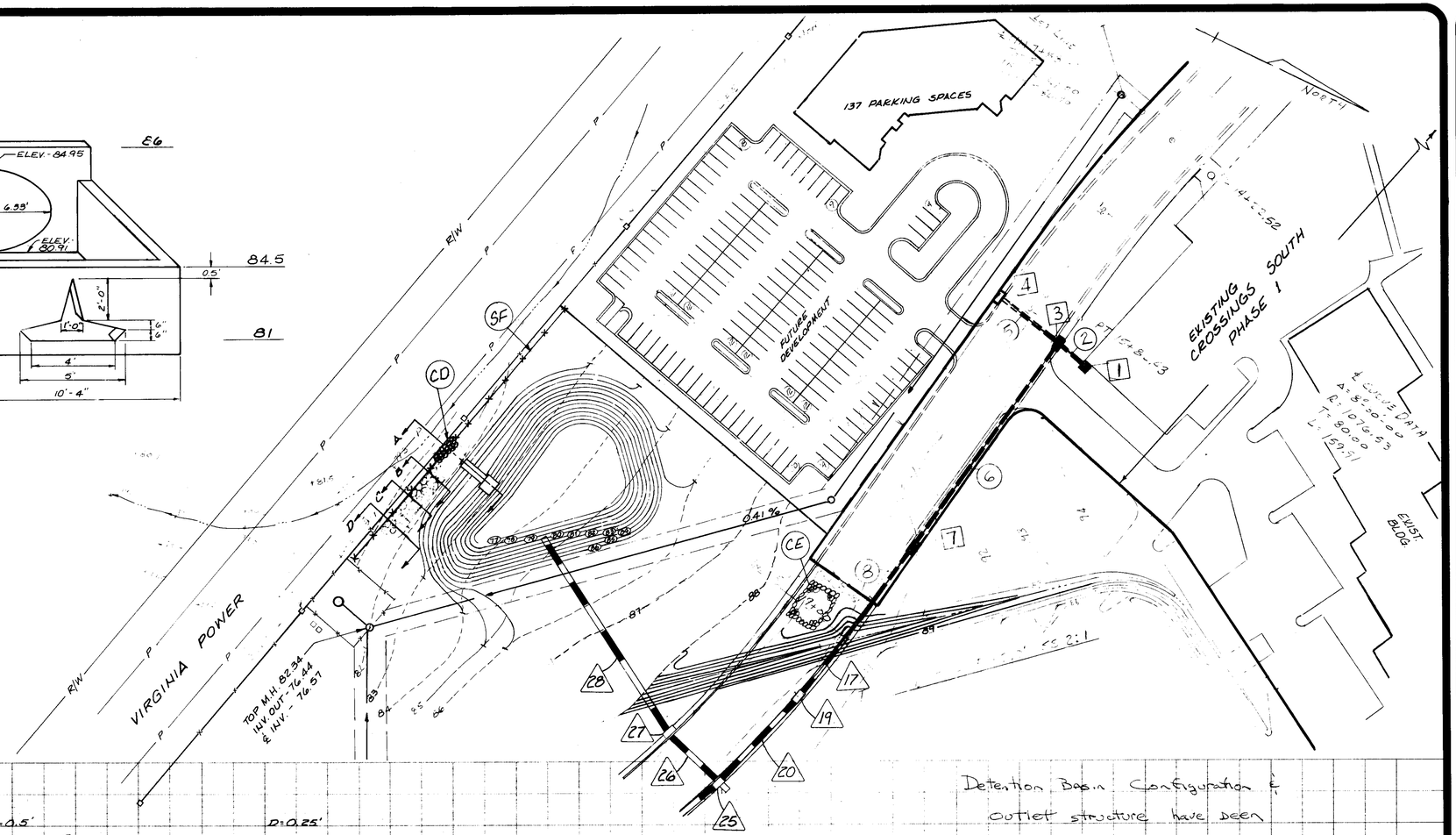

Detention Basin Configuration & outlet structure have been revised. Must resubmit hydrogeologic calculations.

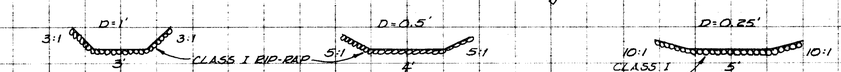

SECTION 'B' N.T.S.

SECTION 'C' N.T.S.

SECTION 'D' N.T.S.

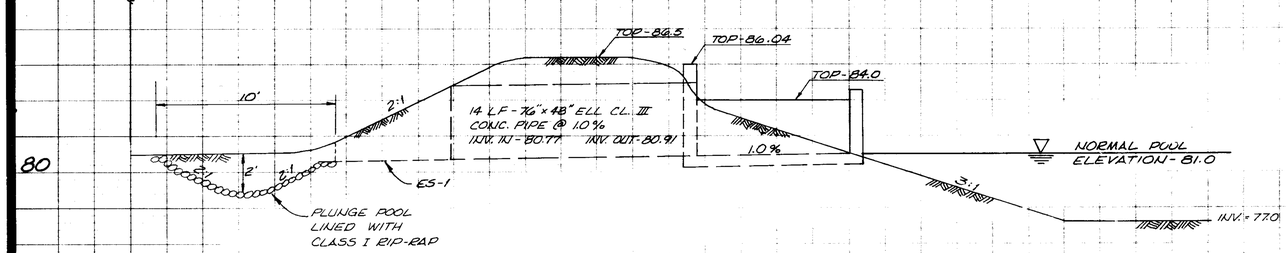

SECTION 'A'

SCALE: HOR. : 1" = 4'
VERT. : 1" = 4'

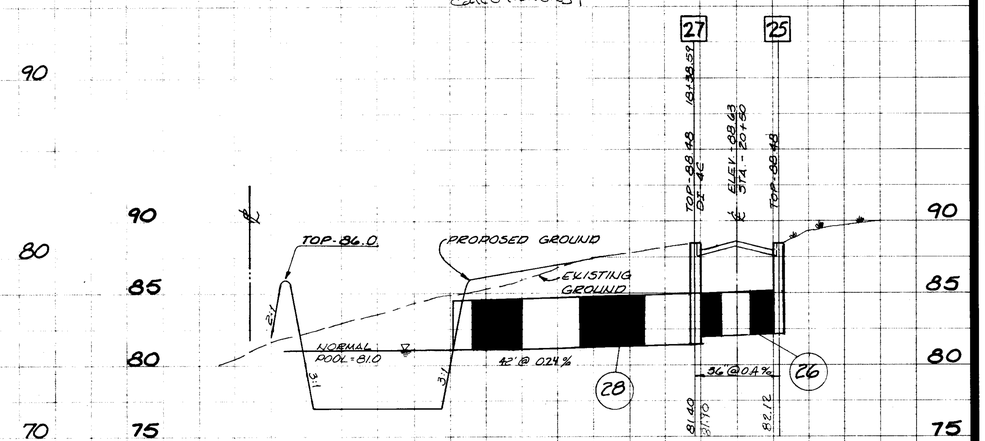

SCALE HORIZ. - 1" = 50'
VERT. - 1" = 5'

Prev. JN 8607-31

NOT APPROVED FOR CONSTRUCTION

J. K. TIMMONS & ASSOCIATES, INC.
ENGINEERS · SURVEYORS · PLANNERS

711 NORTH COURTHOUSE ROAD
RICHMOND, VIRGINIA 23235
TELEPHONE: (804) 794-3500

8803 STAPLES MILL ROAD
RICHMOND, VIRGINIA 23228
TELEPHONE: (804) 262-7396

411 EAST BROADWAY
HOPEWELL, VIRGINIA 23860
TELEPHONE: (804) 458-8685

THE CROSSINGS
OFFICE PARK
PHASE II
PRINCE GEORGE, VIRGINIA

DETENTION BASIN

REVISIONS

COMMONWEALTH OF VIRGINIA
EDWARD L. GLASS
CERTIFICATE No. 017564
CERTIFIED PROFESSIONAL ENGINEER

STAMP	1" = 50'
SCALE	NMA JR
DRAWN BY	5/16/89
DATE DRAWN	NMA JR
DESIGNED	ELG
CHECKED	GJT
SHEET NUMBER	8903-02
JOB NUMBER	