Utility Notes:

General:

1. The Contractor shall call Miss Utility at 1-800-552-7001 and shall verify location and elevation of all underground utilities in areas of construction prior to starting work.
2. The Contractor shall coordinate with all utility companies to determine the exact point of service connection at the existing utility.
3. All utility construction, i.e. piping, valves, hydrants, meters and boxes, clean outs, manholes, bedding, etc. shall comply with the International Plumbing Code, 2000 and with Prince George County Standards. Contractor shall coordinate same with County Engineer, Mr. Stephen McBride, P.E., 804-733-2625.
4. All work shall be subject to inspection by Prince George County. The Contractor shall notify Building Official, Mrs. Julie Walton, 804-733-2636, 48 hours prior to the start of work.
5. Owner shall be responsible for all utility fees.
6. All damage incurred to existing utilities during construction shall be repaired at the Contractor's expense.
7. Contractor shall submit complete "as-built" drawing of all site utilities at completion of project. All utilities shall be located with exact dimensions on "as-built" drawing.
8. All utility trenches in paved areas shall be backfilled, full height, with VDOT 21A stone. Elsewhere, utility trenches shall be backfilled per soils report or good construction practice. See utility trench detail on the plans as is applicable.
9. Contractor shall be responsible for groundwater control as may be required.
10. All check valves, cleanouts, ball valves, etc. shall be located in service boxes / vaults by CDR systems or Armorcast or equal.

Electric:

1. The Contractor shall coordinate electrical service to the site with the local utilitiy company.
2. Electric service to the site shall be located underground. All underground electric cables shall have a minimum cover of 30 inches.
3. See Site Plan for general location of underground service.

Telephone:

1. The Contractor shall coordinate telephone service to the site with local utility company.
2. Telephone service shall be located underground. All underground telephone cables shall have a minimum cover of 30 inches.
3. See Site Plan for general location of underground service.

Water:

1. Domestic main lines shall be PVC, C900, with push-on, gasketed, joints.
2. Domestic service lines shall be CTS roll tubing with compression fittings.
3. All water main lines shall be installed with water detection tape marked with "Potable Water Below". Tape shall be installed 1'-0" above and directly over all water mains.
4. Water piping for fire hydrant assembly shall be Ductile Iron.
5. Contractor shall provide backflow prevention valve on service line to each cottage. Same shall be located in meter box, flush with grade, on exterior of building or in an accessible location inside building. Contractor shall consult Health Official for specific type of backflow valve required.
6. Minimum cover for water lines shall be 3.5 feet.
7. Water service pipe and sanitary sewer pipe shall be separated by at least 10 feet horizontal and 1.5 feet vertical of undisturbed or compacted earth.
8. Contractor shall install concrete thrust blocking at all bends, end caps, etc. of domestic main lines as required. Same shall comply with County standards.
9. All water valves, as shown on the Plans, shall be located in a cast iron inspection box marked "WATER".
10. Water meter shall be Neptune type Pro-Read.
11. Lines, valves and hydrants shall be thoroughly flushed, hydrostatically tested and also chlorinated and bacteriologically tested per County and State Health Department Standards.lin

Sewer:

1. Gravity sanitary sewer lines shall be PVC, SDR35, with integral bell, using bell and sp-got push-on type joints. Pressure lines shall be rolled plastic without joints. All bends shall be properly "blocked" with concrete.
2. Provide cleanouts on gravity sewer lines at no more than 100' OC. See typical detail.
3. Gravity sewer lines shall be bedded in gravel - see typical detail.
4. Each section of line shall be air tested per County standards.

Cable TV:

1. The Contractor shall coordinate cable service to the site with local utility company.
2. Cable service shall be located underground and shall have a minimum cover of 30 inches.

Conduit:

1. All site electrical wiring shall be located in at least 3/4" rigid conduit with 2' minimum cover.

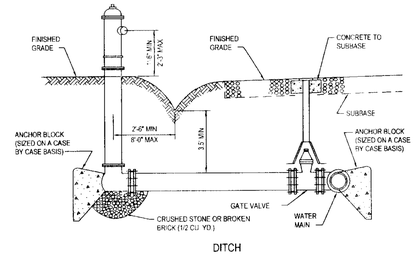

Typ. Fire Hydrant Detail

No Scale

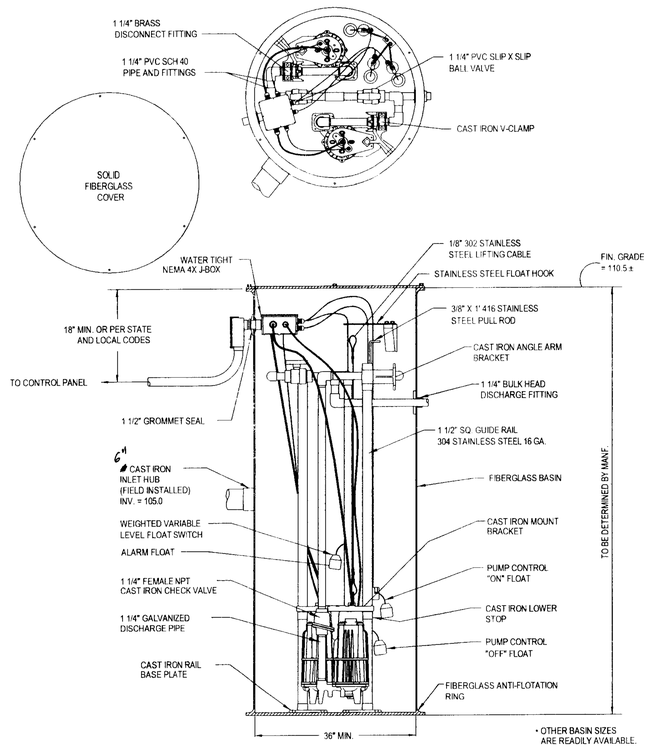

Duplex Pump Station Detail

No Scale

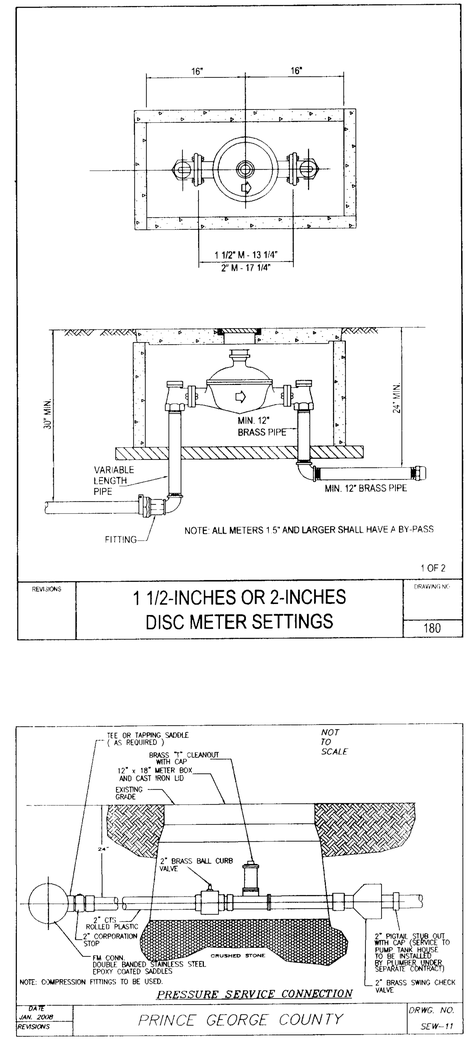

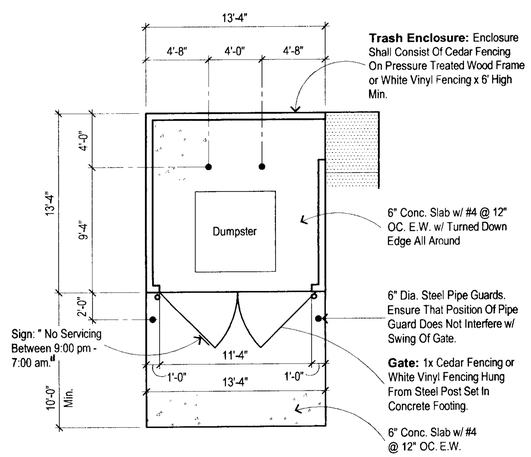

Trash Enclosure Detail

No Scale

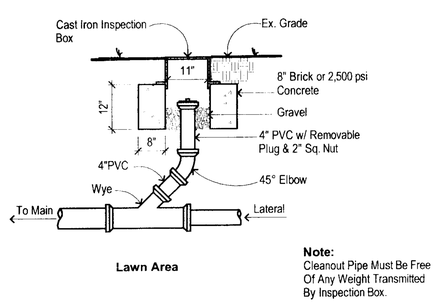

Sanitary Sewer Cleanout Detail

No Scale

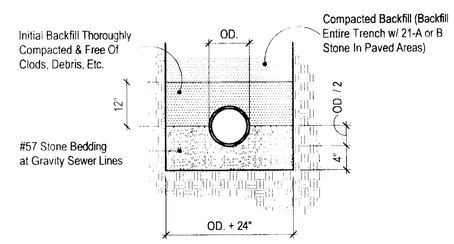

Typ. Water & SS. Trench Detail

Not To Scale

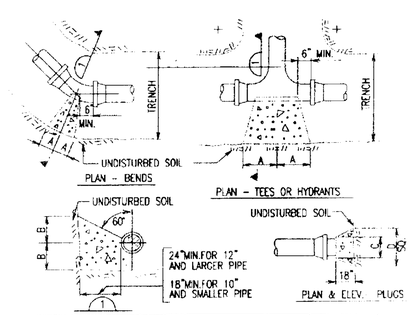

SIZE	1/4 BEND		1/8 BEND		1/16 BEND		TEES OR HYDRANTS		PLUGS	
	A	B	A	B	A	B	A	B	C	D
6	12	15	9	11	5	8	12	12	10	23
8	16	20	12	15	8	11	14	17	12	31
10	21	24	15	18	11	13	17	21	14	38
12	25	29	18	22	13	16	21	25	16	46

Thrust Block Details

No Scale

Utility Notes & Details

Super Kids Ministries, Inc.

Frances Holland & Woo Daves Group Home
5500 Middle Road Prince George County, Virginia 23834

COMMONWEALTH OF VIRGINIA
JEFF B. ROBINSON
No. 021655
PROFESSIONAL ENGINEER
5-19-08

CONSULTING ENGINEER
Post Office Box 66
Emporia, Virginia 23847
434-634-8665 ph
434-634-0254 fx
JEFF ROBINSON & ASSOCIATES, LLPC

March 26, 2008
Rev. May 19, 2008

JRA Job #07-155

© This document is the sole property of Jeff Robinson & Associates, LLPC, Emporia, Virginia. The reproduction in whole or in part, or the modification of any detail or design may not be made without express written consent.