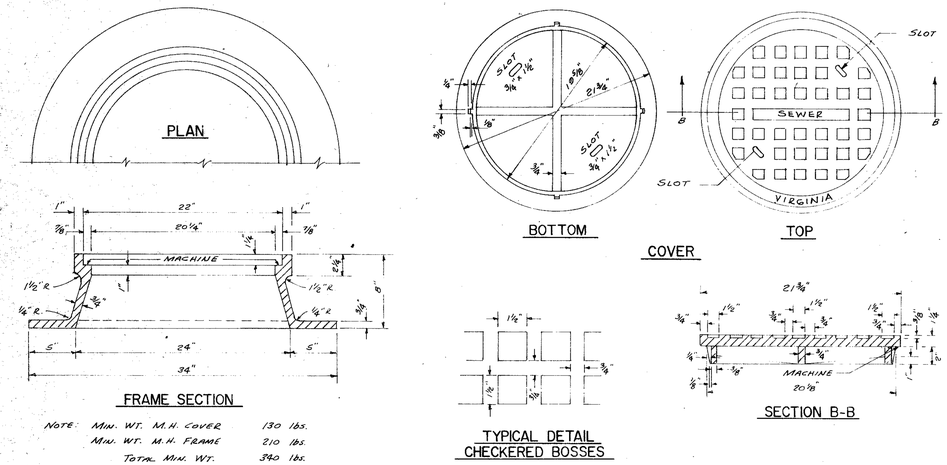

NOTE: MIN. WT. M.H. COVER 130 lbs.
MIN. WT. M.H. FRAME 210 lbs.
TOTAL MIN. WT. 340 lbs.

MANHOLE FRAME AND COVER

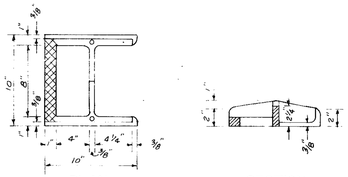

ALTERNATE MAY BE P.V.C. WITH STEEL REINFORCING.

CAST IRON MANHOLE STEPS

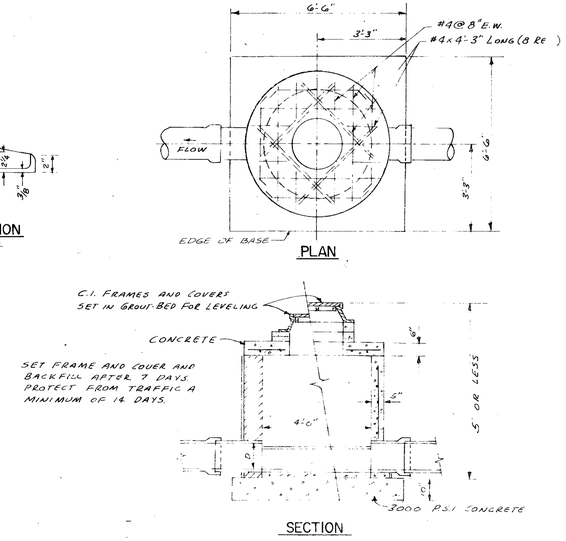

SHALLOW MANHOLE

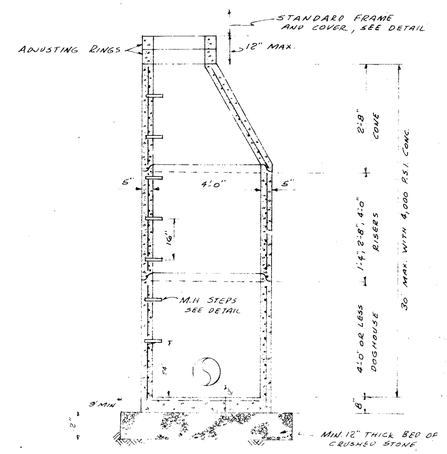

PRECAST CONCRETE MANHOLE WITH MONOLITHIC BASE

(CONFORM TO ASTM C478)

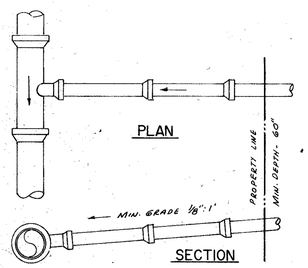

BRANCH HOUSE CONNECTION

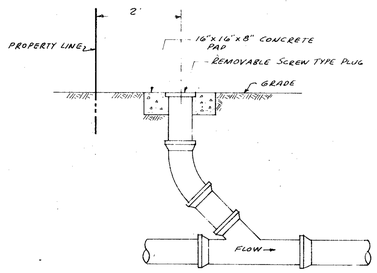

TYPICAL HOUSE CONNECTION CLEAN-OUT

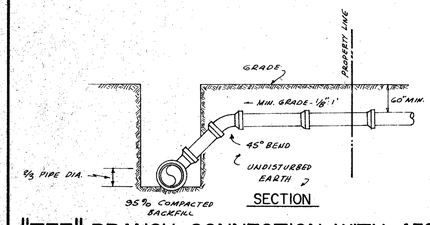

"TEE" BRANCH CONNECTION WITH 45° BEND

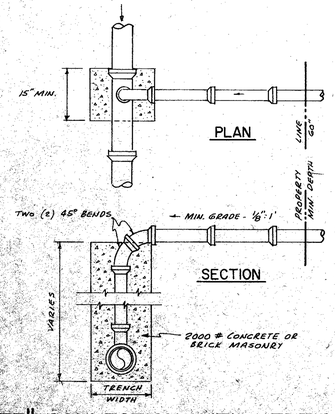

"TEE" CONNECTION WITH VERTICAL RISER

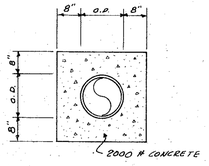

PIPE ENCASEMENT DETAIL

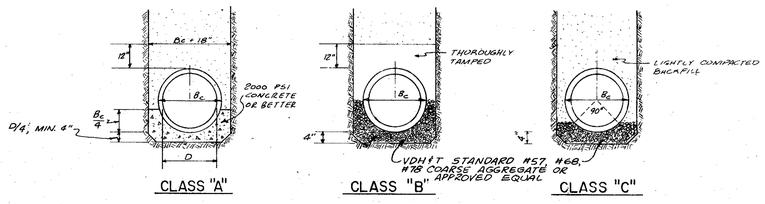

TYPES OF TRENCH BEDDINGS

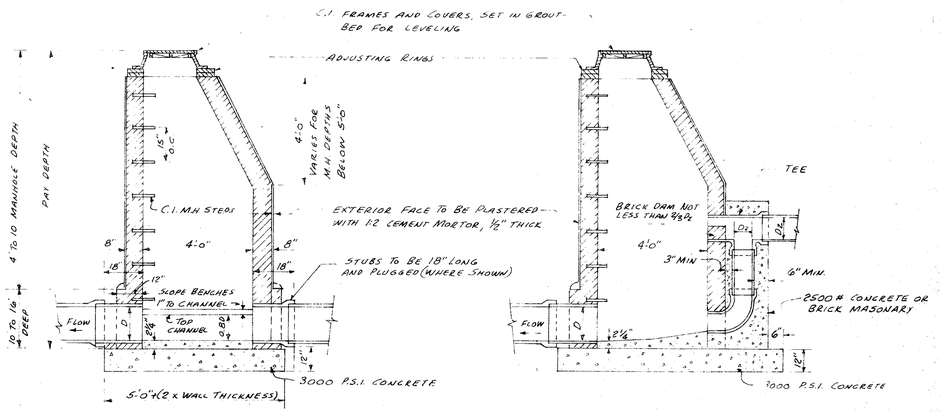

TYPICAL MANHOLE DETAILS

NOTES

1. SANITARY SEWER PIPE SHALL BE VITRIFIED CLAY, CAST IRON, DUCTILE IRON, REINFORCED CONCRETE OR CEMENT ASBESTOS.
2. PIPE CLASS/STRENGTH SHALL BE AS FOLLOWS: (OR, AS SHOWN ON PLANS)
   VITRIFIED CLAY - ASTM C700, EXTRA STRENGTH.
   CAST IRON - ANSI A21.1, A21.4, A21.6.
   DUCTILE IRON - ANSI A21.50, A21.51.
   CONCRETE - ASTM C-76, CLASS III.
   CEMENT ASBESTOS - ASTM C428, CLASS 2400.
3. TRENCH BEDDING SHALL BE CLASS "C" UNLESS SHOWN OTHERWISE ON THE PLANS.

COMMONWEALTH OF VIRGINIA
ROBERT L. LEGAT
CERTIFICATE No. 725
SEC 54-17(3)(b) 77
CERTIFIED LAND SURVEYOR

L-E	Legat Elrod & Associates Inc. Consulting Engineers Surveyors Hopewell Virginia	Date 2 FEB. 1979 Scale AS SHOWN Drawn DEH Checked MLE
STRATFORD WOODS SECTION 6 PRINCE GEORGE COUNTY, VIRGINIA		Revisions
TYPICAL SANITARY SEWER CONSTRUCTION DETAILS AND NOTES		Proj No 7705-22 Sheet 11 Of 11