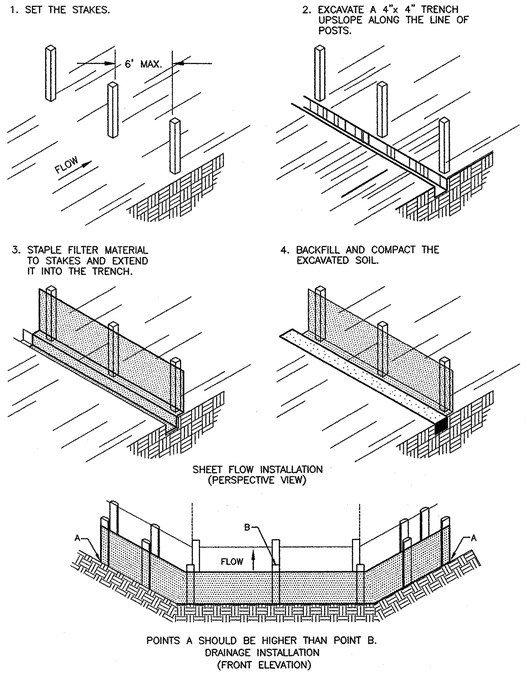

SF SILT FENCE
NOT TO SCALE

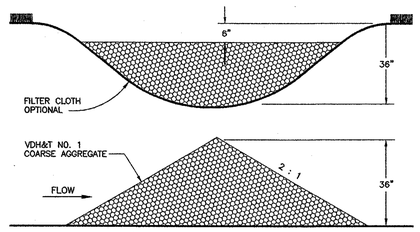

2 ACRES OR LESS OF DRAINAGE AREA

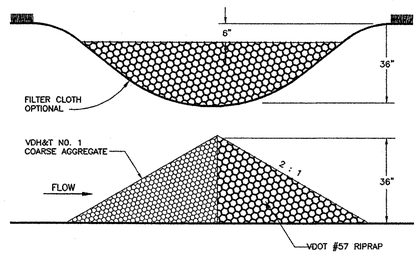

2 – 10 ACRES OF DRAINAGE AREA

CD CHECK DAM
NOT TO SCALE

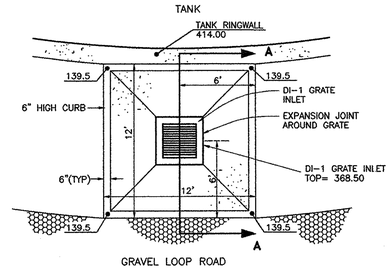

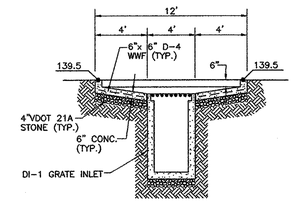

SECTION A–A

OVERFLOW SPLASH PAD
NOT TO SCALE

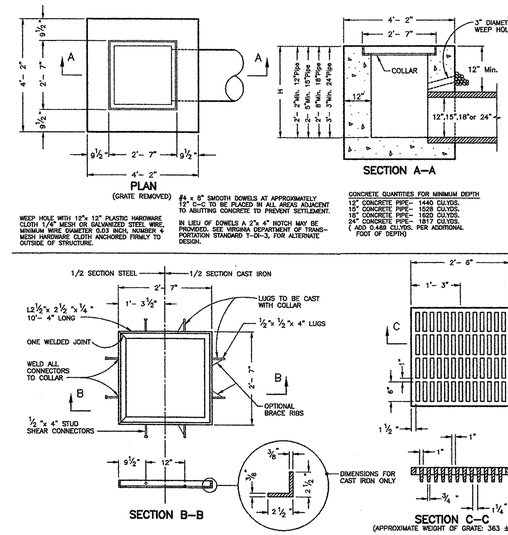

VDOT STANDARD DI–1
NOT TO SCALE

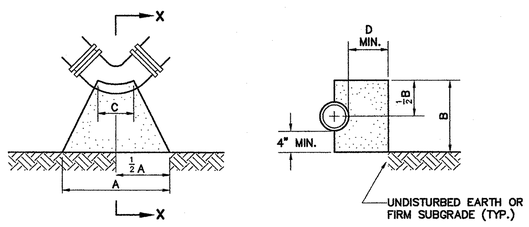

PLAN

SECTION X–X

NOTE: INSTALL TWO LAYERS OF 15 LB. BUILDER'S FELT OR TWO LAYERS OF 6 MIL. POLYETHYLENE BETWEEN CONCRETE AND FITTING.

PIPE DIA.	45° BEND					90° BEND				
	A	B	C	D	E	A	B	C	D	E
3"	9"	12"	6"	6"	4"	12"	12"	6"	12"	6"
4"	9"	12"	6"	6"	4"	16"	12"	6"	12"	6"
6"	12"	14"	6"	8"	4"	21"	14"	6"	18"	6"
8"	18"	16"	8"	9"	6"	30"	16"	8"	18"	9"
10"	24"	18"	8"	10"	6"	36"	24"	10"	18"	9"
12"	30"	20"	12"	12"	9"	48"	24"	12"	18"	12"
16"	42"	30"	12"	15"	9"	60"	30"	16"	21"	12"
20"	56"	30"	12"	16"	16"	72"	40"	20"	21"	24"
24"	60"	36"	12"	21"	24"	84"	48"	24"	24"	30"
30"	72"	48"	16"	27"	24"	108"	60"	30"	24"	36"

BASED ON NORMAL OPERATING PRESSURE UP TO 150 PSI

E = ADDITIONAL LENGTH TO BE ADDED TO DIMENSION A FOR EACH ADDITIONAL 50 PSI PRESSURE UP TO 300 PSI

THRUST BLOCK DETAILS
(45° – 90° BENDS)
NOT TO SCALE

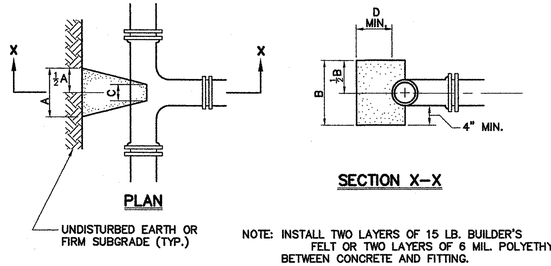

NOTE: INSTALL TWO LAYERS OF 15 LB. BUILDER'S FELT OR TWO LAYERS OF 6 MIL. POLYETHYLENE BETWEEN CONCRETE AND FITTING.

TEE	BRANCH DIAMETER									
	3"	4"	6"	8"	10"	12"	16"	20"	24"	30"
A	12"	12"	16"	18"	26"	30"	40"	48"	60"	80"
B	12"	16"	20"	30"	32"	42"	56"	72"	80"	96"
C	8"	8"	12"	12"	12"	12"	16"	24"	24"	24"
D	6"	6"	8"	9"	10"	12"	14"	18"	20"	24"

BASED ON NORMAL OPERATING PRESSURE UP TO 150 PSI

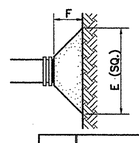

NOTE: INSTALL TWO LAYERS OF 15 LB. BUILDER'S FELT OR TWO LAYERS OF 6 MIL. POLYETHYLENE BETWEEN CONCRETE AND FITTING.

PLUG	PIPE DIAMETER									
	3"	4"	6"	8"	10"	12"	16"	20"	24"	30"
E	14"	16"	21"	29"	36"	41"	54"	64"	75"	88"
F	8"	8"	10"	10"	12"	14"	16"	18"	20"	24"

BASED ON NORMAL OPERATING PRESSURE UP TO 150 PSI

THRUST BLOCK DETAILS
(TEES, TAPPING SLEEVES, PLUGS & CAPS)
NOT TO SCALE

NOTE: IN ROCK TRENCH, EXCAVATE AT LEAST 6" BELOW THE BELL OF THE PIPE.

NOTE: CLASS "C-1" BEDDING TO BE USED ONLY FOR PRESSURE LINES.

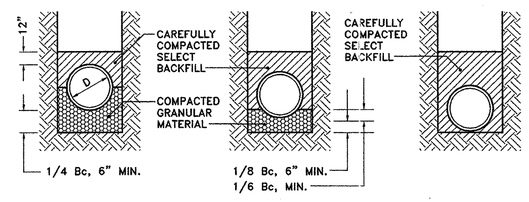

CLASS "B" LOAD FACTOR = 1.9

CLASS "C" LOAD FACTOR = 1.5

CLASS "C-1" LOAD FACTOR = 1.5

Bc = O.D. OF PIPE
D = I.D. OF PIPE

BEDDING DETAIL
NOT TO SCALE

NOTE: MINIMUM DISTANCE BETWEEN HYDRANT AND FACE OF CURB SHALL BE 24 INCHES. (WHERE APPLICABLE)

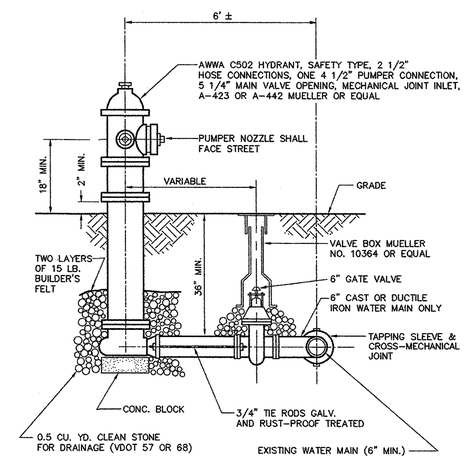

FIRE HYDRANT ASSEMBLY
NOT TO SCALE

COMMONWEALTH OF VIRGINIA
JEFFREY P. KAPINOS
CERTIFICATE No. 21876
CERTIFIED PROFESSIONAL ENGINEER

R99125.05FD

Draper Aden Associates
Blacksburg • Richmond, Virginia
Engineering • Surveying • Environmental Services

DESIGNED:	JPK
CADD-TECH:	AQN
CHECKED:	FTP
DATE:	11/05/99

MISCELLANOUS DETAILS
SOUTHPOINT BUSINESS PARK WATER STORAGE TANK
PRINCE GEORGE COUNTY , VIRGINIA

REVISIONS:

SCALE: NOT TO SCALE

PROJECT No. T-R99125.05F

SHEET 5 OF 7