SPHEROID TANK

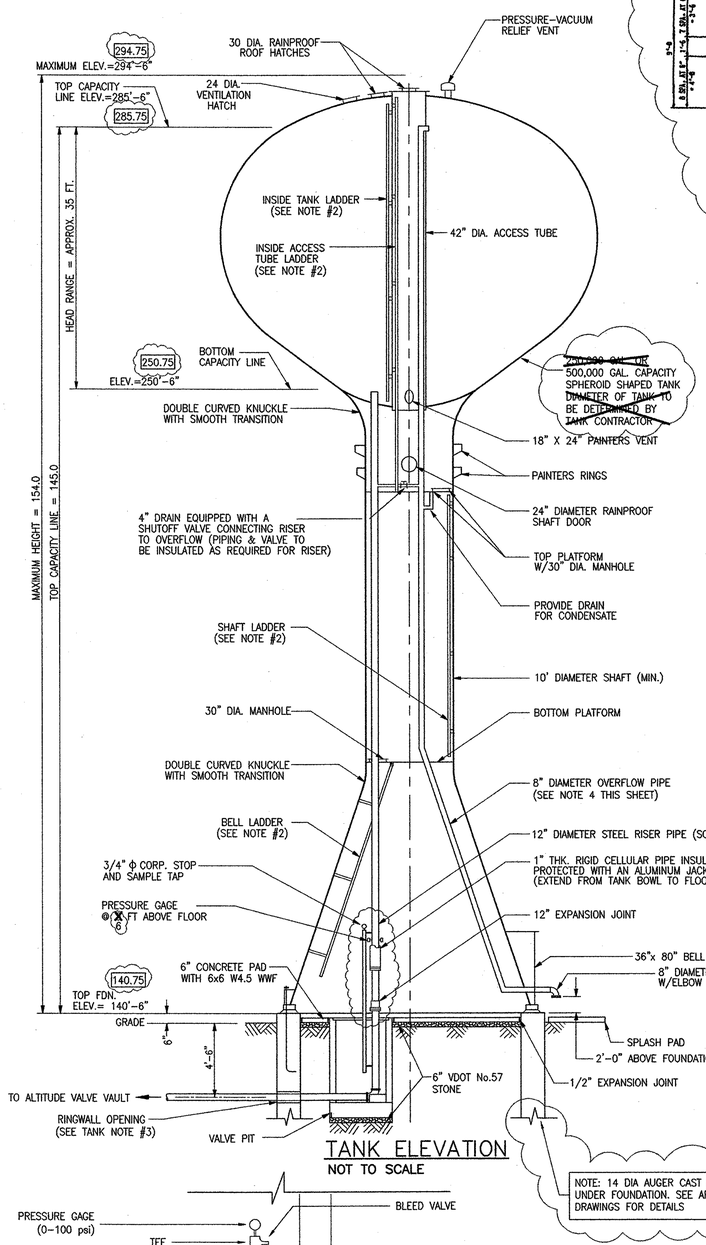

NOTE: 14 DIA AUGER CAST PILES INSTALLED UNDER FOUNDATION. SEE APPROVED SHOP DRAWINGS FOR DETAILS

TANK ELEVATION
NOT TO SCALE

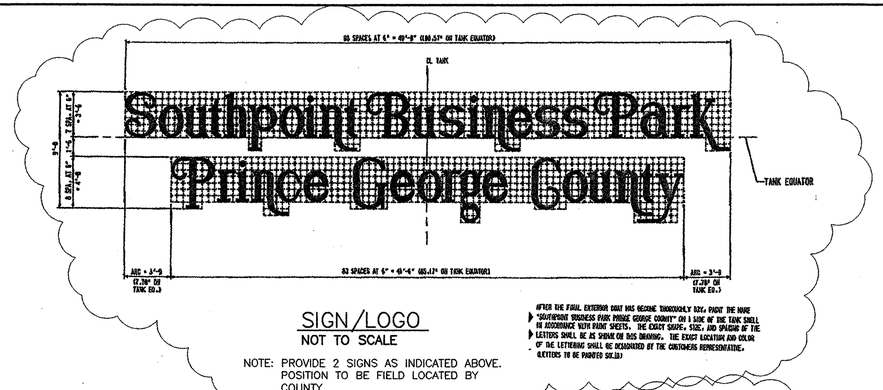

SIGN/LOGO
NOT TO SCALE

NOTE: PROVIDE 2 SIGNS AS INDICATED ABOVE. POSITION TO BE FIELD LOCATED BY COUNTY.

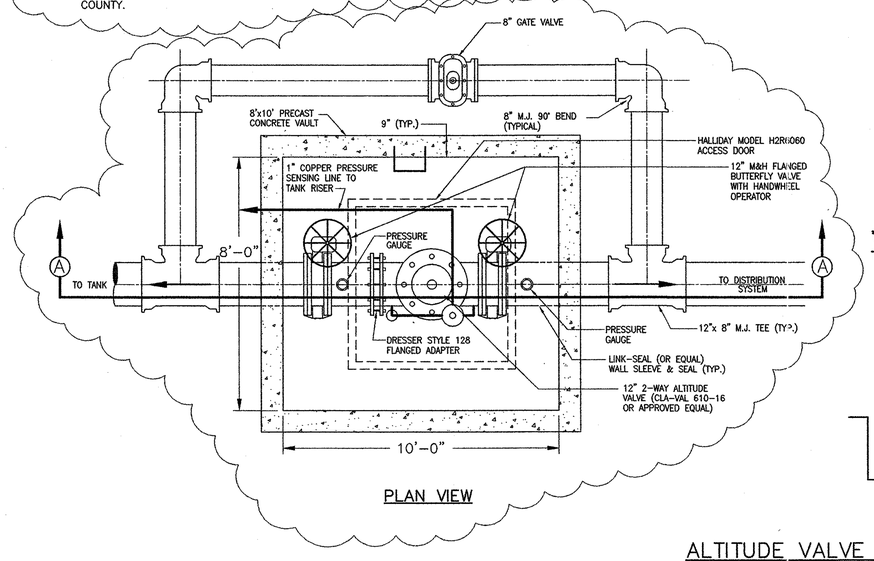

PLAN VIEW

ALTITUDE VALVE VAULT NOTES

1. THE ALTITUDE VALVE SHALL BE A 12 INCH CLA-VAL MODEL 610-~~X~~16 ALTITUDE VALVE FOR TWO-WAY FLOW. THE VALVE SHALL BE A NON-THROTTLING, HYDRAULICALLY OPERATED AND PILOT CONTROLLED VALVE THAT REMAINS FULLY OPEN UNTIL THE SHUT OFF POINT IS REACHED. THE VALVE SHALL CLOSE AT A HIGH WATER LEVEL AND OPEN FOR RETURN FLOW WHEN THE PRESSURE AT THE VALVE INLET IS LESS THAN THE TANK PRESSURE.
2. ALL PIPE AND FITTINGS WITHIN THE CONTROL VALVE VAULT SHALL BE 250 LB. FLANGE. PIPE SHALL BE A MINIMUM CLASS 52 IN ACCORDANCE WITH ANSI A21.15 (AWWA C115). ALL FLANGES SHALL CONFORM TO CLASS 250, ANSI B16.1.
3. ALL VALVES SHALL BE SUPPORTED WITH PIPE SADDLE SUPPORTS AS SHOWN.
4. ALL PRE-CAST VAULT SECTIONS SHALL CONFORM TO ASTM C913.
5. THE FLOOR SLAB SHALL BE SLOPED 1/8" PER FOOT TO THE SUMP.
6. ALL JOINTS SHALL BE SEALED WITH A BUTYL RUBBER SEALANT.
7. THE BASE VAULT SECTION INCLUDING THE SUMP SHALL BE MONOLITHIC.

VALVE PIT NOTES

1. DETAILED STRUCTURAL PLANS FOR THE VALVE PIT SHALL BE SUBMITTED FOR APPROVAL TO THE ENGINEER. THE VALVE PIT SHALL BE STRUCTURALLY DESIGNED BY A PROFESSIONAL ENGINEER REGISTERED IN THE STATE OF VIRGINIA.
2. ALL PIPING INSIDE THE VALVE PIT SHALL BE 125 LB. FLANGE. OPENING IN VALVE PIT WALL SHALL BE A NOMINAL 1-INCH LARGER THAN FLANGE DIAMETER. PROVIDE LINK-SEAL WALL SLEEVE AND SEAL (OR EQUAL) FOR A WATERTIGHT WALL PENETRATION.

TANK NOTES

1. THE TANK FOUNDATION SHALL BE DESIGNED BY THE CONTRACTOR'S ENGINEER. DETAILED FOUNDATION PLANS FOR THE TANK SHALL BE SUBMITTED FOR APPROVAL TO THE ENGINEER. THE FOUNDATION SHALL BE DESIGNED BY A PROFESSIONAL ENGINEER REGISTERED IN THE STATE OF VIRGINIA.
2. LADDERS IN BELL, PEDESTAL, ACCESS TUBE, AND TANK SHALL BE EQUIPPED WITH RIGID-RAIL TYPE SAFETY CLIMB DEVICES MEETING OSHA REQUIREMENTS.
3. OPENING IN RINGWALL FOR THE WATER LINE SHALL BE A NOMINAL 1-INCH LARGER THAN FLANGE DIAMETER. THE ANNULAR SPACE AROUND PIPE SHALL NOT BE GROUTED OR CAULKED.
4. TANK CONTRACTOR TO ENSURE THAT OVERLOW PIPE WILL ACCOMMODATE AT MAXIMUM OVERFLOW RATE OF 1500 GPM.

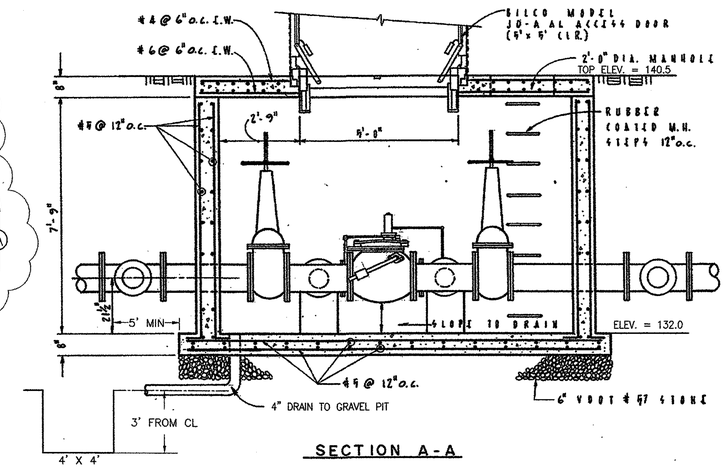

SECTION A-A

ALTITUDE VALVE VAULT DETAIL
NOT TO SCALE

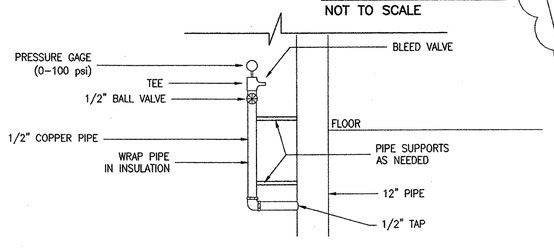

PRESSURE GAGE
NOT TO SCALE

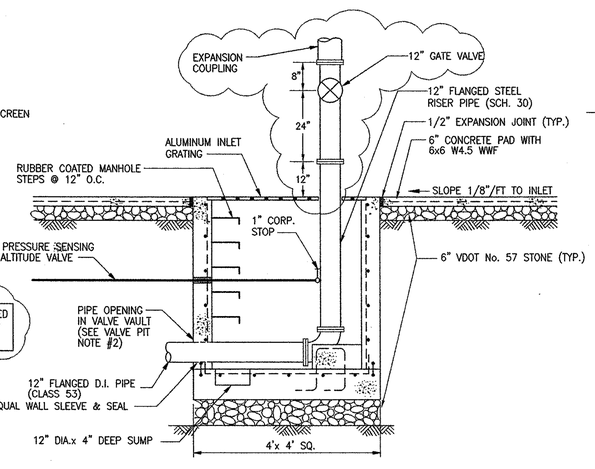

VALVE PIT DETAIL
NOT TO SCALE

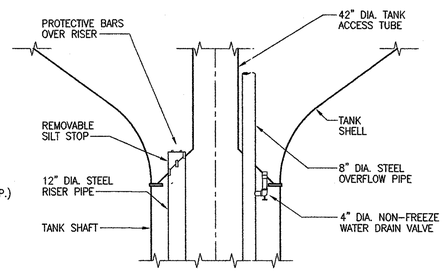

TANK DRAIN AND REMOVABLE SILT STOP

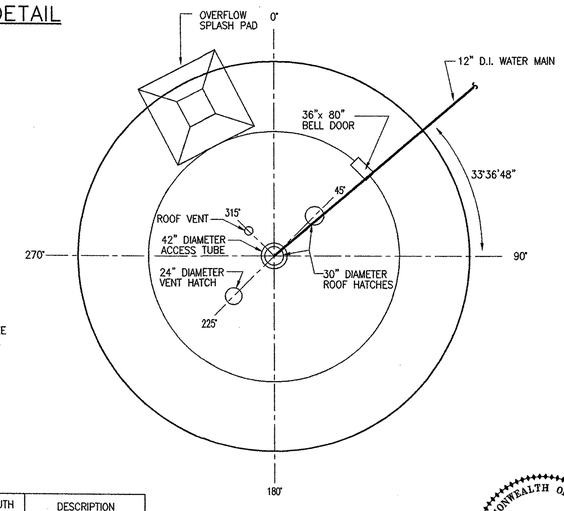

AZIMUTH	DESCRIPTION
0°00'00"	NORTH ARROW
297°23'46"	OVERFLOW SPLASH PAD
45°	PEDESTAL DOOR
56°23'12"	WATER MAIN

TANK ORIENTATION PLAN
NOT TO SCALE

COMMONWEALTH OF VIRGINIA
JEFFREY P. KAPINOS
CERTIFICATE No. 21876
CERTIFIED PROFESSIONAL ENGINEER

R99125.05FC

Draper Aden Associates
Blacksburg • Richmond, Virginia
Engineering • Surveying • Environmental Services

DESIGNED:	JPK
CADD-TECH:	AQN
CHECKED:	FTP
DATE:	11/05/99

TANK DETAILS-PEDESTAL SPHEROID
SOUTHPOINT BUSINESS PARK WATER STORAGE TANK
PRINCE GEORGE COUNTY, VIRGINIA

REVISIONS:
2/19/01 - RECORD DRAWING

SCALE: NOT TO SCALE

PROJECT No. T-R99125.05F

SHEET 3 OF 7