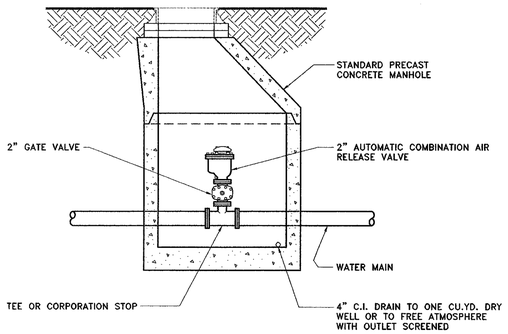

2" AUTOMATIC COMBINATION SEWAGE AIR RELEASE VALVE DETAIL

NOT TO SCALE

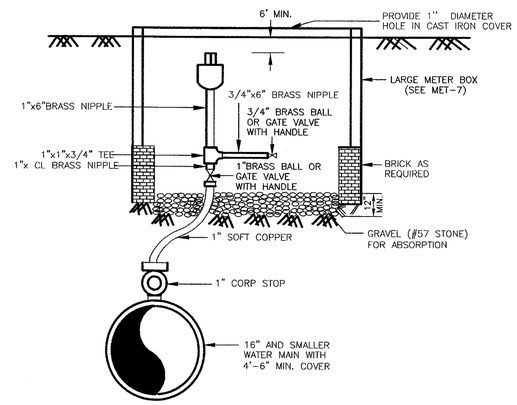

NOTE:

1. IT IS THE RESPONSIBILITY OF THE DESIGN ENGINEER TO DESIGN THE PUBLIC WATER SYSTEM TO MINIMIZE THE NUMBER OF AIR RELEASE VALVES BY ELIMINATING HIGH POINTS WHERE REASONABLY FEASIBLE AND TO PROPERLY SIZE THE AIR RELEASE VALVE TAKING INTO CONSIDERATION ALL THE DESIGN FACTORS, AND KEEPING IN MIND THAT A 1" AIR RELEASE VALVE FOR 16" WATER LINES IS DESIRABLE. ORIFICE SIZE SHALL BE NOTED ON PLANS.
2. ALL COPPER FITTINGS WILL BE FLARE OR COMPRESSION TYPE.
3. SADDLE MUST BE USED IF TAP IS MADE IN PVC.
4. WHERE THE AIR RELEASE VALVE IS REMOTE FROM THE WATER LINE THERE MUST BE CONTINUOUS RISE IN THE COPPER SUPPLY LINE TO THE AIR RELEASE VALVE AND NO TRAP SHALL BE PERMITTED.
5. AIR RELEASE VALVE TO BE PLACED WHERE NOT SUBJECT TO FLOODING.

1" AIR RELEASE VALVE

NOT TO SCALE

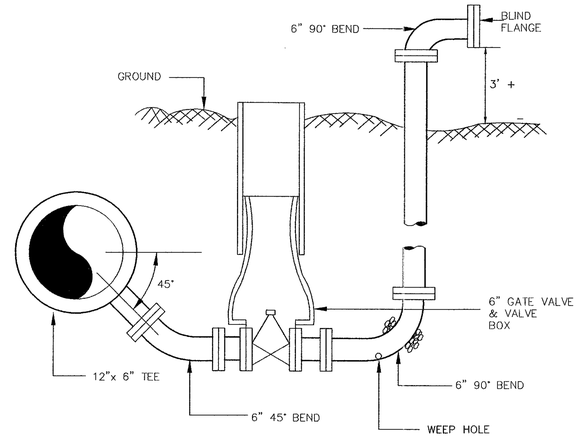

NOTE:

1. THE BLOW-OFF SHALL BE DRAINED TO PREVENT FREEZING.
2. ALL PIPE AND FITTINGS SHALL BE FLANGED OR M.J. RESTRAINED JOINTS.
3. WEEP HOLE TO BE CUT/DRILLED 2' BELOW GROUND LEVEL TO SUFFICIENTLY ALLOW STAND PIPE TO DRAIN. BACKFILL WITH AT LEASE 1/2 CUBIC YARD OF CLEAN STONE.

6" BLOWOFF

NOT TO SCALE

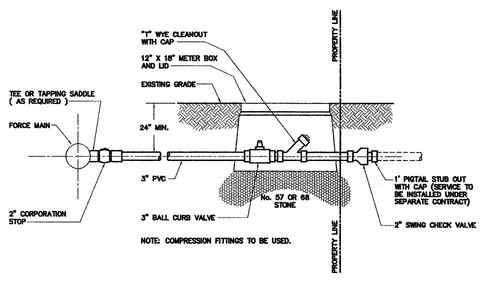

FORCE MAIN 3" SERVICE CONNECTION

NOT TO SCALE

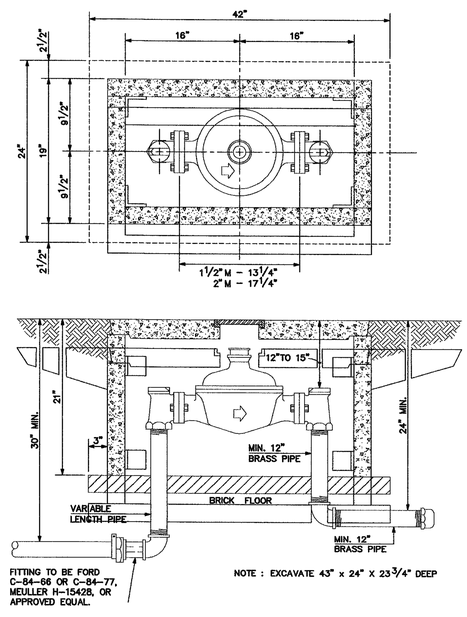

1-1/2" AND LARGER DISC METER SETTINGS

NOT TO SCALE

COMMONWEALTH OF VIRGINIA
JEFFREY P. KAPINOS
CERTIFICATE No. 21876
9/25/00
CERTIFIED PROFESSIONAL ENGINEER

R00223-04_WATER_D.DWG

Draper Aden Associates
Blacksburg • Richmond, Virginia
Engineering • Surveying • Environmental Services

DESIGNED:	AQN
CADD-TECH:	AQN
CHECKED:	JPK
DATE:	9-15-00

DETAILS
SOUTHPOINT BUSINESS PARK UTILITY EXTENSION
PRINCE GEORGE COUNTY , VIRGINIA

REVISIONS:

SCALE: NOT TO SCALE

PROJECT No. R00223-04F

SHEET D2