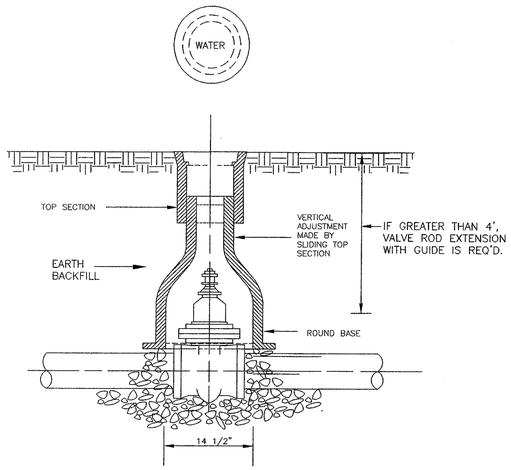

USE STANDARD DESIGNED VALVE BOX OF THE APPROPRIATE LENGTH (HEIGHT) UTILIZING APPROVED MANUFACTURERS OF VALVE BOX APPURTENANCES.

VALVE BOX DETAIL

NOT TO SCALE

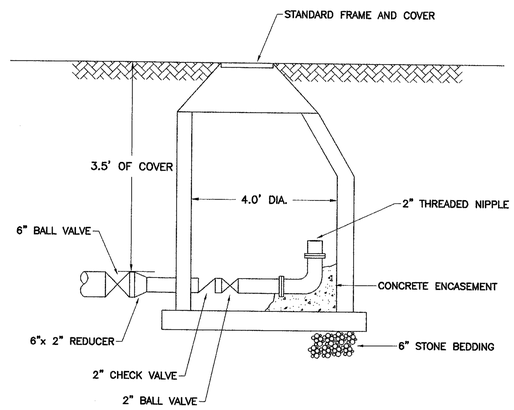

FLUSHING CONNECTION DETAIL

NOT TO SCALE

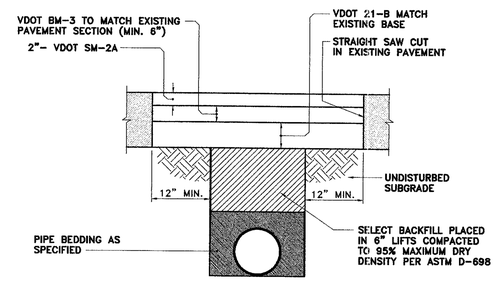

EXISTING PAVEMENT REPAIR DETAIL

NOT TO SCALE

NOTE: MINIMUM DISTANCE BETWEEN HYDRANT AND FACE OF CURB SHALL BE 24 INCHES. (WHERE APPLICABLE)

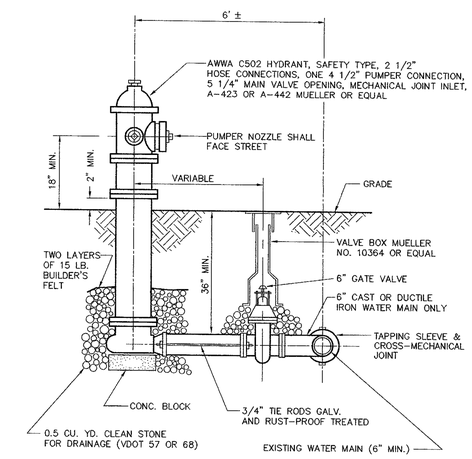

FIRE HYDRANT ASSEMBLY

NOT TO SCALE

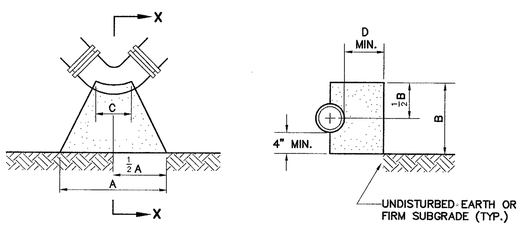

PLAN

SECTION X-X

NOTE: INSTALL TWO LAYERS OF 15 LB. BUILDER'S FELT OR TWO LAYERS OF 6 MIL. POLYETHYLENE BETWEEN CONCRETE AND FITTING.

PIPE DIA.	45° BEND					90° BEND				
	A	B	C	D	E	A	B	C	D	E
3"	9"	12"	6"	6"	4"	12"	12"	6"	12"	6"
4"	9"	12"	6"	6"	4"	16"	12"	6"	12"	6"
6"	12"	14"	6"	8"	4"	21"	14"	6"	18"	6"
8"	18"	16"	8"	9"	6"	30"	16"	8"	18"	9"
10"	24"	18"	8"	10"	6"	36"	24"	10"	18"	9"
12"	30"	20"	12"	12"	9"	48"	24"	12"	18"	12"
16"	42"	30"	12"	15"	9"	60"	30"	16"	21"	12"
20"	56"	30"	12"	16"	16"	72"	40"	20"	21"	24"
24"	60"	36"	12"	21"	24"	84"	48"	24"	24"	30"
30"	72"	48"	16"	27"	24"	108"	60"	30"	24"	36"

BASED ON NORMAL OPERATING PRESSURE UP TO 150 PSI

E = ADDITIONAL LENGTH TO BE ADDED TO DIMENSION A FOR EACH ADDITIONAL 50 PSI PRESSURE UP TO 300 PSI

THRUST BLOCK DETAILS

(45° – 90° BENDS)

NOT TO SCALE

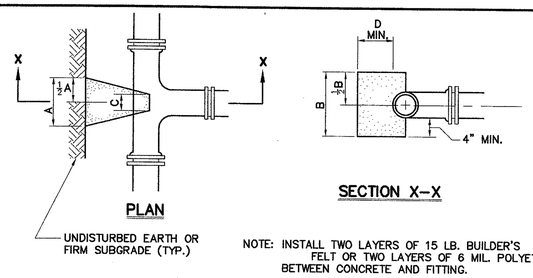

PLAN

SECTION X-X

NOTE: INSTALL TWO LAYERS OF 15 LB. BUILDER'S FELT OR TWO LAYERS OF 6 MIL. POLYETHYLENE BETWEEN CONCRETE AND FITTING.

TEE	BRANCH DIAMETER									
	3"	4"	6"	8"	10"	12"	16"	20"	24"	30"
A	12"	12"	16"	18"	26"	30"	40"	48"	60"	80"
B	12"	16"	20"	30"	32"	42"	56"	72"	80"	96"
C	8"	8"	12"	12"	12"	12"	16"	24"	24"	24"
D	6"	6"	8"	9"	10"	12"	14"	18"	20"	24"

BASED ON NORMAL OPERATING PRESSURE UP TO 150 PSI

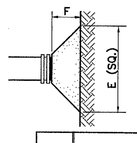

NOTE: INSTALL TWO LAYERS OF 15 LB. BUILDER'S FELT OR TWO LAYERS OF 6 MIL. POLYETHYLENE BETWEEN CONCRETE AND FITTING.

PLUG	PIPE DIAMETER									
	3"	4"	6"	8"	10"	12"	16"	20"	24"	30"
E	14"	16"	21"	29"	36"	41"	54"	64"	75"	88"
F	8"	8"	10"	10"	12"	14"	16"	18"	20"	24"

BASED ON NORMAL OPERATING PRESSURE UP TO 150 PSI

THRUST BLOCK DETAILS

(TEES, TAPPING SLEEVES, PLUGS & CAPS)

NOT TO SCALE

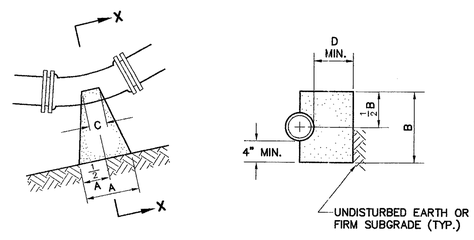

PLAN

SECTION X-X

NOTE: INSTALL TWO LAYERS OF 15 LB. BUILDER'S FELT OR TWO LAYERS OF 6 MIL. POLYETHYLENE BETWEEN CONCRETE AND FITTING.

PIPE DIA.	11 1/4° BEND					22 1/2° BEND				
	A	B	C	D	E	A	B	C	D	E
3"	4"	12"	4"	6"	2"	6"	12"	6"	7"	2"
4"	4"	12"	4"	6"	2"	6"	12"	6"	7"	2"
6"	6"	14"	6"	7"	2"	8"	14"	6"	8"	2"
8"	8"	16"	8"	7"	2"	12"	16"	8"	8"	4"
10"	9"	18"	8"	8"	4"	15"	18"	8"	10"	4"
12"	12"	20"	12"	9"	4"	18"	20"	12"	12"	6"
16"	15"	24"	12"	9"	6"	24"	24"	12"	15"	6"
20"	30"	12"	10"	10"	6"	30"	30"	12"	18"	9"
24"	18"	36"	12"	12"	6"	36"	36"	12"	18"	9"
30"	24"	42"	16"	14"	9"	48"	42"	16"	21"	12"

BASED ON NORMAL OPERATING PRESSURE UP TO 150 PSI

E = ADDITIONAL LENGTH TO BE ADDED TO DIMENSION A FOR EACH ADDITIONAL 50 PSI PRESSURE UP TO 300 PSI

THRUST BLOCK DETAILS

(11 1/4° & 22 1/2° BENDS)

NOT TO SCALE

NOTE: IN ROCK TRENCH, EXCAVATE AT LEAST 6" BELOW THE BELL OF THE PIPE.

NOTE: CLASS "C-1" BEDDING TO BE USED ONLY FOR PRESSURE LINES.

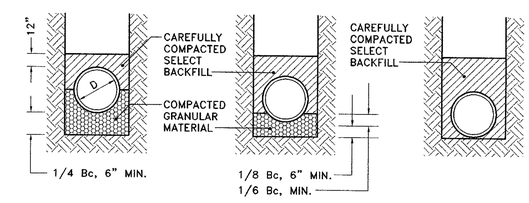

CLASS "B" LOAD FACTOR = 1.9

CLASS "C" LOAD FACTOR = 1.5

CLASS "C-1" LOAD FACTOR = 1.5

Bc = O.D. OF PIPE
D = I.D. OF PIPE

BEDDING DETAIL

NOT TO SCALE

COMMONWEALTH OF VIRGINIA
JEFFREY R. KAPINOS
CERTIFICATE No. 21876
9/25/00
CERTIFIED PROFESSIONAL ENGINEER

R00223\04F0.DWG

Draper Aden Associates
Blacksburg • Richmond, Virginia
Engineering • Surveying • Environmental Services

DESIGNED:	AQN
CADD-TECH:	AQN
CHECKED:	JPK
DATE:	9-15-00

UTILITY DETAILS

SOUTHPOINT BUSINESS PARK UTILITY EXTENSION

PRINCE GEORGE COUNTY , VIRGINIA

REVISIONS:

SCALE: NOT TO SCALE

PROJECT No. R00223-04F

SHEET D1