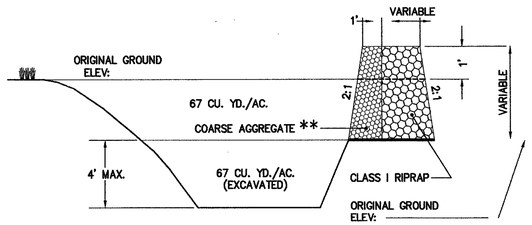

CROSS SECTION OF OUTLET

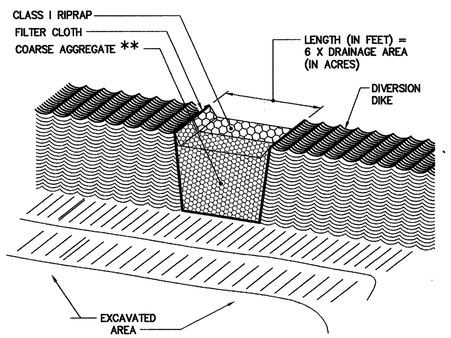

**COARSE AGGREGATE SHALL BE VDOT #3, #357 OR #5.

OUTLET (PERSPECTIVE VIEW)

(ST) TEMPORARY SEDIMENT TRAP

NO SCALE

(PER STD. & SPEC. 3.13 OF VIRGINIA EROSION & SEDIMENT CONTROL HANDBOOK, 3RD ED.)

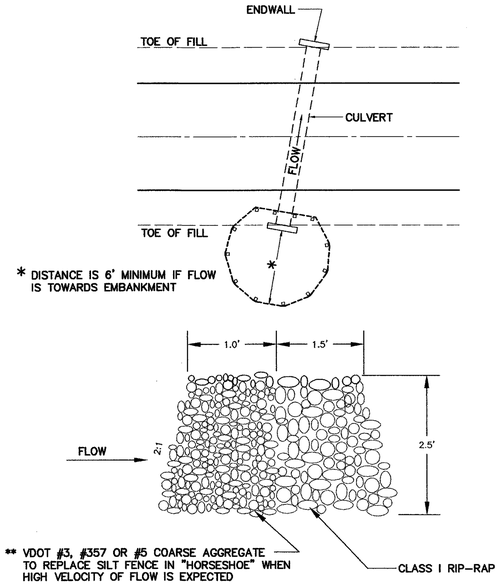

(CIP) CULVERT INLET PROTECTION

NO SCALE

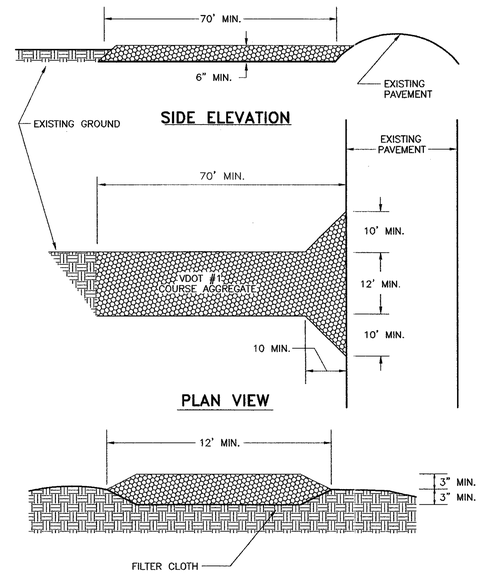

SECTION VIEW

(CE) CONSTRUCTION ENTRANCE

NO SCALE

(PER STD. & SPEC. 3.02 OF VESCH, 3RD ED.)

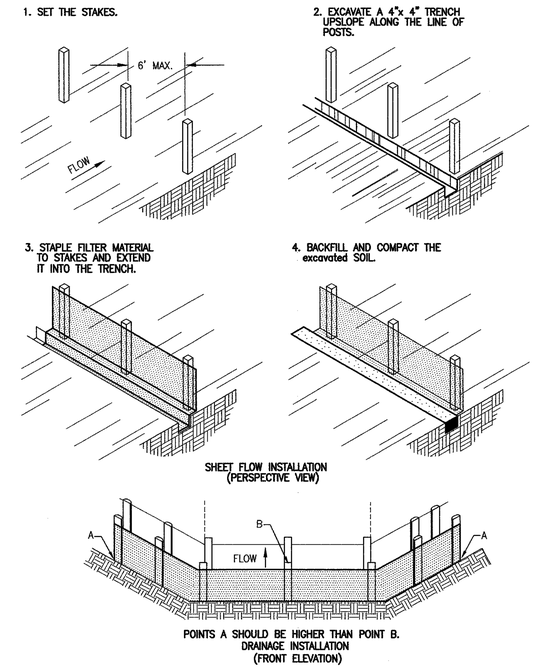

(SF) CONSTRUCTION OF A SILT FENCE

(WITHOUT WIRE SUPPORT)

NO SCALE

(PER STD. & SPEC. 3.05 OF VESCH, 3RD ED.)

SEDIMENT TRAPS

TRAP #	DRAINAGE AREA (ACRES)	WET STOR. VOL. REQ'D.	WET STOR. VOL. PROV.	WET STOR. ELEV. (TOP)	DRY STOR. VOL. REQ'D.	DRY STOR. VOL. PROV.	DRY STORAGE ELEV.	OUTLET LENGTH	BERM TOP WIDTH	BOTTOM DIMENSION
A	1.14	76.4	81.1	110	76.4	106.3	111.5	6.84	2.0	25'X48'
B	1.00	67.0	76.1	110	67.0	73.3	111.25	6.0	2.0	25'X37'
C	2.15	144.1	144.1	117	144.1	190.7	119	12.9	2.0	31'X49'
D	1.38	92.5	109.7	117	92.5	93.0	118	8.28	2.0	30'X40'
E	0.96	64.3	66.8	112	64.3	88.9	114	5.76	2.0	30'X33'

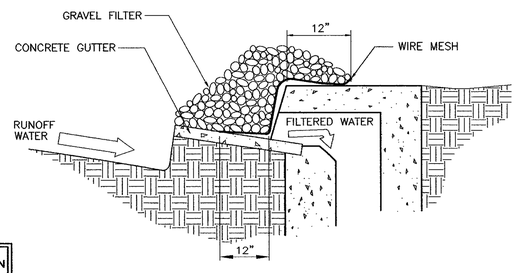

SPECIFIC APPLICATION

THIS METHOD OF INLET PROTECTION IS APPLICABLE AT CURB INLETS WHERE PONDING IN FRONT OF THE STRUCTURE IS NOT LIKELY TO CAUSE INCONVENIENCE OR DAMAGE TO ADJACENT STRUCTURES AND UNPROTECTED AREAS.

* GRAVEL SHALL BE VDOT #3, #357 OR 5 COARSE AGGREGATE

(IP) GRAVEL CURB INLET SEDIMENT FILTER

NO SCALE

(PER STD. & SPEC. 3.07 OF VESCH, 3RD ED.)

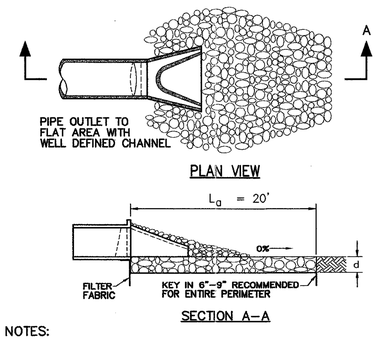

SECTION A–A

NOTES:

1. L_a IS THE LENGTH OF THE RIPRAP APRON.
2. d=1.5 TIMES THE MAXIMUM STONE DIAMETER BUT NOT LESS THAN 6 INCHES.
3. IN A WELL DEFINED CHANEL, EXTEND THE APRON UP THE CHANNEL BANKS TO AN ELEVATION OF 6 INCHES ABOVE THE MAXIMUM TAILWATER DEPTH OR TO THE TOP OF THE BANK, WHICHEVER IS LESS.
4. A FILTER BLANKET OR FILTER FABRIC SHALL BE INSTALLED BETWEEN THE RIPRAP AND THE SOIL FOUNDATION.

(OP) OUTLET PROTECTION

NO SCALE

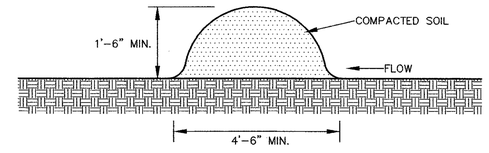

CONSTRUCTION SPECIFICATIONS

1. WHENEVER FEASIBLE, THE DIKE SHOULD BE BUILT BEFORE CONSTRUCTION BEGINS ON THE PROJECT.
2. THE DIKE SHOULD BE ADEQUATELY COMPACTED TO PREVENT FAILURE.
3. TEMPORARY OR PERMANENT SEEDING AND MULCH SHALL BE APPLIED TO THE DIKE WITHIN 15 DAYS OF CONSTRUCTION.
4. THE DIKE SHOULD BE LOCATED TO MINIMIZE DAMAGE BY CONSTRUCTION OPERATIONS AND TRAFFIC.

(DD) TEMPORARY DIVERSION DIKE

NO SCALE

(PER STD. & SPEC. 3.09 OF VIRGINIA EROSION & SEDIMENT CONTROL HANDBOOK, 3RD ED.)

COMMONWEALTH OF VIRGINIA
GLENN W. CUSTIS
CERTIFICATE No. 8039
8/13/00
CERTIFIED PROFESSIONAL ENGINEER

Draper Aden Associates
Blacksburg • Richmond, Virginia
Engineering • Surveying • Environmental Services

DESIGNED:	CMS
DRAWN:	DAA
CHECKED:	GWC
DATE:	8/13/00

ROAD DETAILS
SOUTHPOINT BUSINESS PARK ACCESS ROAD
PRINCE GEORGE COUNTY, VIRGINIA

REVISIONS:

SCALE: AS SHOWN

PLAN NO. T-R00223.03L

C5.1

P:\PROJECTS\R00\R00223\R00223-03\CIVIL\C002230CPT.DWG