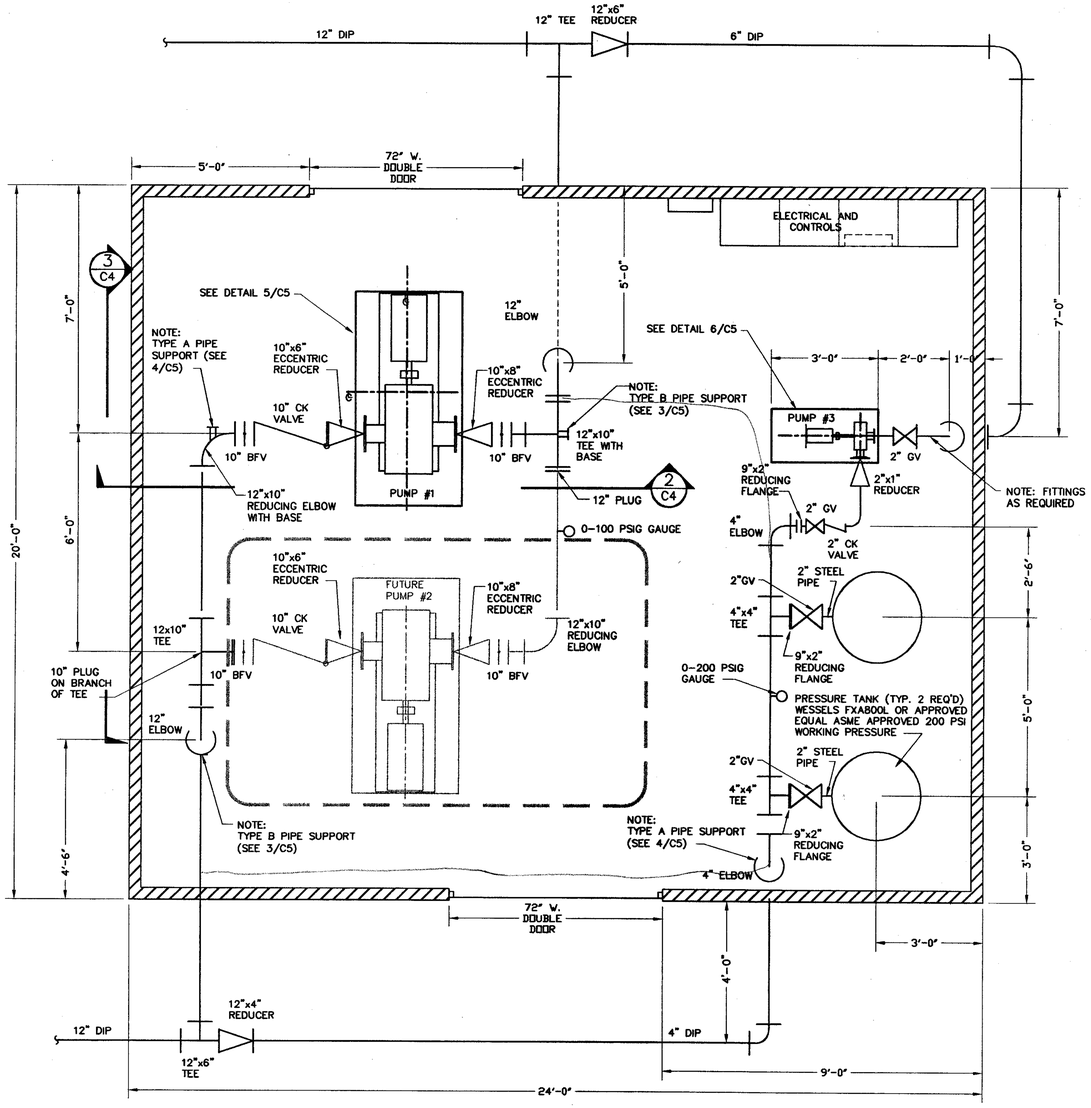

1 C4 PLAN
SCALE: 1/2" = 1'-0"

NOTE:
PUMP #1 SHALL BE PACO MODEL 6015-1 CENTRIFUGAL PUMP OR APPROVED EQUAL.
PERFORMANCE REQUIREMENTS
2400 GPM @ 221' TDH
DRIVER SHALL BE 200 HP, 3ø, 460V, 1750 RPM MOTOR, MINIMUM 1.15 SERVICE FACTOR.
PUMP, FRAME AND MOTOR ASSEMBLY SHALL BE FACTORY ASSEMBLED.
INSTALL AND TEST IN ACCORDANCE WITH MANUFACTURER'S REQUIREMENTS.

NOTE:
PUMP #3 SHALL BE GOULDS MODEL 3756 S-GROUP FRAME - MOUNTED END SUCTION CENTRIFUGAL PUMP OR APPROVED EQUAL.
PERFORMANCE REQUIREMENTS
50 GPM @ 85' TDH
MINIMUM 108' SHUT OFF HEAD
DRIVER SHALL BE 2 HP, 3ø, 460V TEFC MOTOR, MINIMUM 1.15 SERVICE FACTOR PUMP, FRAME AND MOTOR ASSEMBLY SHALL BE FACTORY ASSEMBLED.
INSTALL AND TEST IN ACCORDANCE WITH MANUFACTURER'S REQUIREMENTS.

ME-1
LARGE PUMP ON 55 PSI (60 PSI)
LARGE PUMP OFF 150 PSI
SMALL PUMP ON 80 PSI
" " OFF 105 PSI

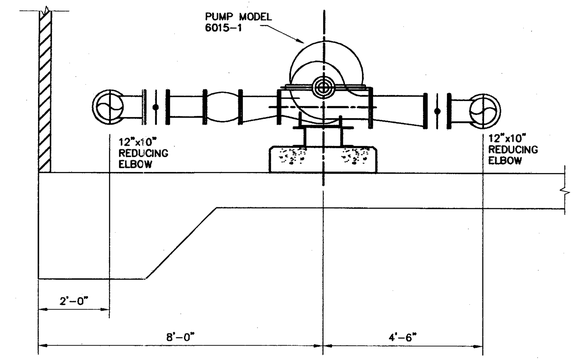

2 C4 SECTION
SCALE: NTS

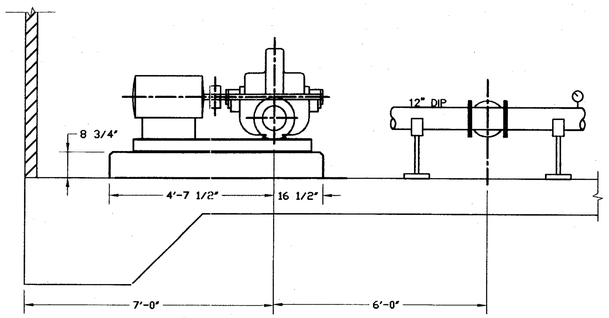

3 C4 SECTION
SCALE: NTS

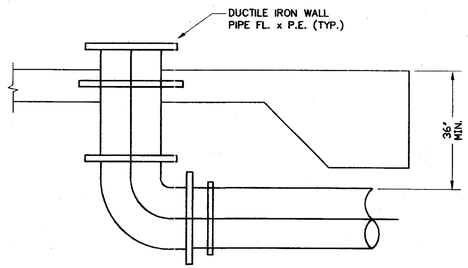

BELOW GRADE FITTINGS SHALL BE M.J. WITH JOINT RESTRAINT - MEGALUS OR APPROVED EQUAL

4 C4 DETAIL
SCALE: NTS

HODGE ENGINEERING COMPANY
1537 Western Avenue
Knoxville, Tennessee
37921-6318
Ph. (865) 546-3232
Fax (865) 546-3969
www.heci.com
Consulting Engineers
Planners - Architects

SEAL:

PROJECT NO.: 1711
DRAWN BY: MAS
DESIGNED BY: PJW
CHECKED BY: PJW

REVISIONS:

No.	DATE	DESCRIPTION

PROJECT TITLE:
SOUTHPOINT IND. PARK BOOSTER PUMP STATION

LOCATION:
PRINCE GEORGE CO. VIRGINIA

SHEET CONTENTS:
PUMP STATION-EQUIPMENT PLAN

SCALE: AS NOTED
DATE: 22 OCT., 2002
SHEET NUMBER: C4
OF 6