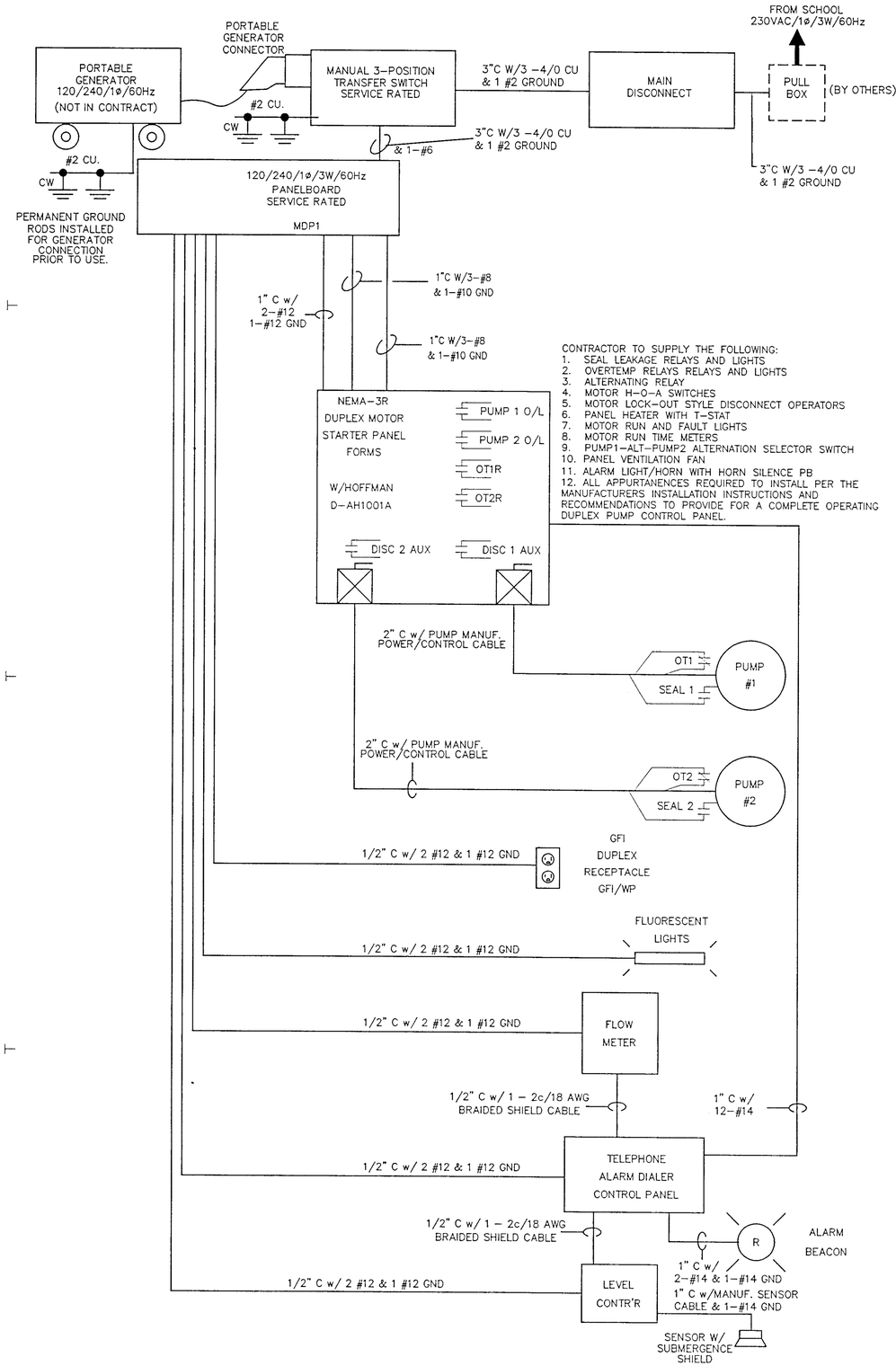

CONTRACTOR TO SUPPLY THE FOLLOWING:
1. SEAL LEAKAGE RELAYS AND LIGHTS
2. OVERTEMP RELAYS RELAYS AND LIGHTS
3. ALTERNATING RELAY
4. MOTOR H-O-A SWITCHES
5. MOTOR LOCK-OUT STYLE DISCONNECT OPERATORS
6. PANEL HEATER WITH T-STAT
7. MOTOR RUN AND FAULT LIGHTS
8. MOTOR RUN TIME METERS
9. PUMP1-ALT-PUMP2 ALTERNATION SELECTOR SWITCH
10. PANEL VENTILATION FAN
11. ALARM LIGHT/HORN WITH HORN SILENCE PB
12. ALL APPURTANENCES REQUIRED TO INSTALL PER THE MANUFACTURERS INSTALLATION INSTRUCTIONS AND RECOMMENDATIONS TO PROVIDE FOR A COMPLETE OPERATING DUPLEX PUMP CONTROL PANEL.

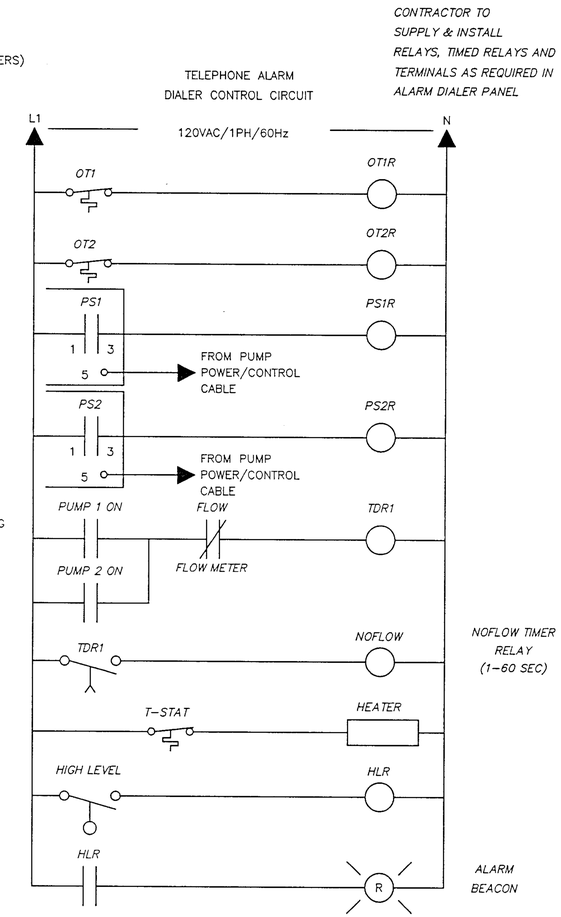

CONTRACTOR TO SUPPLY & INSTALL RELAYS, TIMED RELAYS AND TERMINALS AS REQUIRED IN ALARM DIALER PANEL

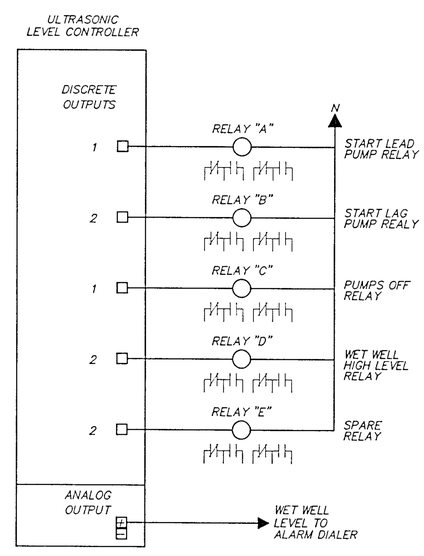

CONTRACTOR TO SUPPLY AND INSTALL RELAYS A,B,C,D,E IN DUPLEX PUMP CONTROL PANEL

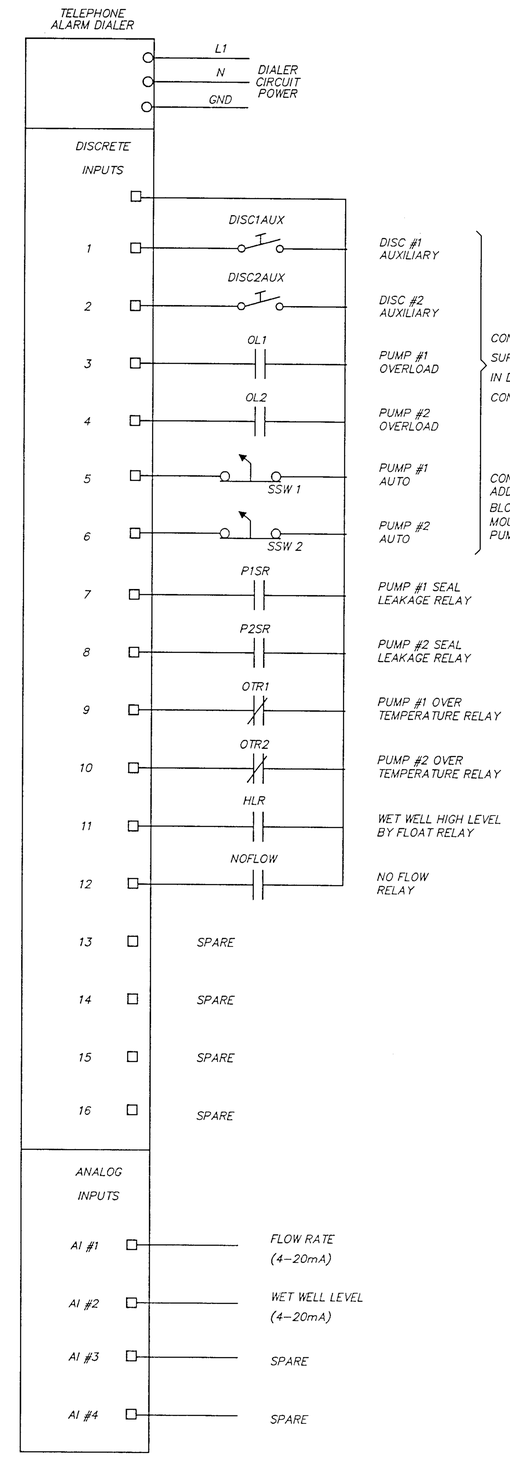

CONTRACTOR TO SUPPLY AND INSTALL IN DUPLEX PUMP CONTROL PANEL

CONTRACTOR SHALL ADD AND WIRE CONTACT BLOCKS TO THE H-O-A'S MOUNTED IN THE DUPLEX PUMP CONTROL PANEL

BCWH

ARCHITECTURE
INTERIORS
PLANNING
CONSULTING

207 West Brood Street
Richmond, Virginia 23220

804. 788. 4774 voice
804. 788. 0966 fax

www. bcwh. com

SOUTH ELEMENTAR
SCHOOL LAGOON
CLOSURE,
PUMP STATION
AND FORCE MAIN

PRINCE GEORGE COUNT
SCHOOL BOARD

PRINCE GEORGE, VIRGIN

© BCWH, Inc.
Material included herein is licensed for copyright. Use of this work in whole or in part is forbidden without the expressed written consent of BCWH, Inc.

PROJECT NUMBER:
20148-07

PROJECT MANAGER:
STEVE PELLEI
Steve Pelleï

DRAWN BY:
DLG

ISSUE DATE:
JUNE 18, 2002

REVISIONS:

COMMONWEALTH OF VIRGINIA
BRIAN F. BORTELL
No. 21266
6/18/02
PROFESSIONAL ENGINEER

FINAL PLANS
FOR CONSTRUCTION

TIMMONS
CIVIL ENGINEERS
CORPORATE HEADQUARTERS
711 N. COURTHOUSE ROAD
RICHMOND, VIRGINIA 23236-4099
TELEPHONE: (804) 794-3500
FAX: (804) 794-7836

TIMMONS PROJECT #20148-07

SHEET TITLE:
PUMP STATION
ELECTRICAL CONTROLS
AND SCHEMATIC
DIAGRAM

SHEET NUMBER:
14