NOTES

1. OWNER TO REVIEW AND APPROVE CONTROL PANEL HUT FOR COLOR & THEME
2. ALL LUMBER TO BE PRESSURE TREATED.
3. NO. 57 STONE AROUND ELECTRIC PANEL HUT (5' BEYOND OUTSIDE PERIMETER OF ROOF DRIP LINE OF HUT)

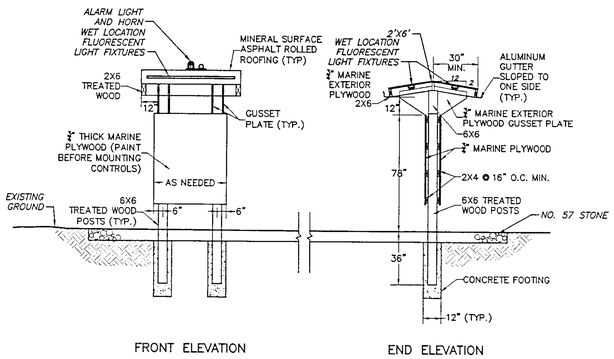

FRONT ELEVATION END ELEVATION

ELECTRIC PANEL HUT

SCALE: 1/4" = 1'-0"

LEGEND

1. SUBMERSIBLE GRINDER PUMP
2. SUBMERSIBLE PUMP SLIDE GUIDE BASE
3. FLOAT SWITCH
4. STAINLESS STEEL FLOAT SWITCH CABLE BAR WITH MILLTRONICS XRS-5 TRANSDUCER OR APPROVED EQUAL MOUNTED ACCORDING TO MANUFACTURER'S RECOMMENDATIONS
5. 2"ø SCH 40 GALV PIPE
6. INTERMEDIATE GUIDE BAR BRACKET
7. PUMP SLIDE RAIL GUIDE BARS
8. 2"ø 90° BEND
9. PIPE HANGERS
10. PIPE SUPPORTS
11. 2" UNION
12. 2"ø CHECK VALVE
13. 2"ø GATE VALVE
14. 2"x2"x2" TEE
15. WALL SLEEVE & "LINK SEAL"
16. NEMA 4X JUNCTION BOX
17. 2"x4" REDUCER
18. 2" CAM & GROOVE COUPLING WITH DUST PLUG (FLUSH COUPLING)
19. PRECAST CONCRETE WET WELL (4'-0" DIA.)
20. 6'-0"L x 4'-0"W PRECAST VALVE VAULT (INSIDE DIMENSIONS)
21. ALUMINUM ACCESS HATCH (2'-6" x 2'-6" SINGLE DR.)
22. ALUMINUM ACCESS HATCH (2'-6" x 2'-6" SINGLE DR.)
23. ALUMINUM ACCESS LADDER
24. 8"ø P.V.C. GRAVITY SANITARY SEWER PIPE (INV. IN=142.40)
25. 4"ø D.I. VENT WITH SCREENS
26. 2"ø P.V.C. DRAIN (1/4" PER 1'-0" (MIN.))
27. 4"ø P.V.C. FORCE MAIN
28. NEOPRENE BOOT
29. 316 STAINLESS STEEL LIFT CABLE
30. 2" FLAP VALVE
31. 9" CAST IRON LID FOR ACCESS TO FLUSHING CONNECTION
32. 6"x6" MOUNTING PEDESTAL

NOTE: ALL PIPE FITTINGS SHALL BE GALVANIZED STEEL

ABBREVIATION KEY:

ø = DIAMETER
DBL. = DOUBLE
D.I. = DUCTILE IRON
DR. = DOOR
ELEV. = ELEVATION
F = FLANGED TYPE PIPE CONNECTION
INV. = INVERT
MIN. = MINIMUM
MJ = MECHANICAL JOINT PIPE CONNECTION
PE = PLAIN END PIPE CONNECTION
P.V.C. = POLYVINYL CHLORIDE
SAN. SEW. = SANITARY SEWER

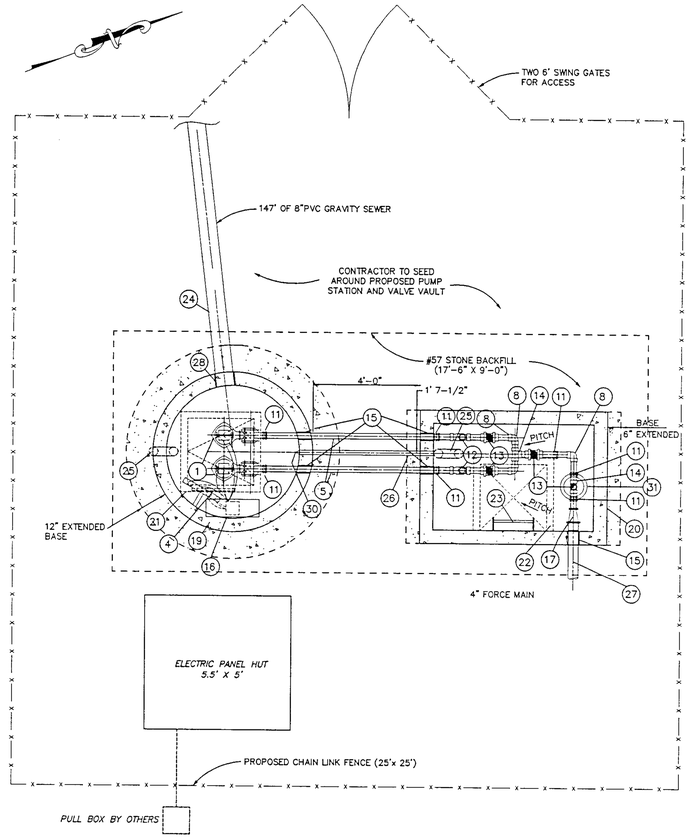

PLAN VIEW
PUMP STATION AND VALVE VAULT

SCALE: 3/8"=1'-0"

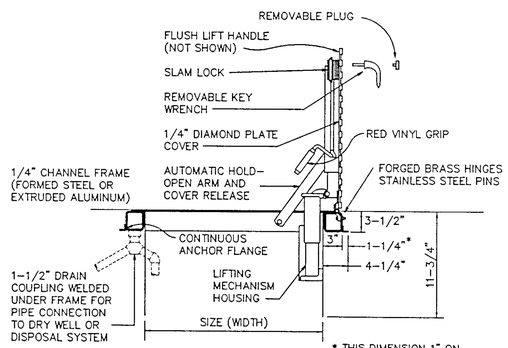

HATCH DETAIL

NO SCALE

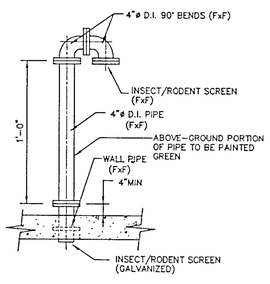

-SCREENED D.I. VENT-

NOT TO SCALE

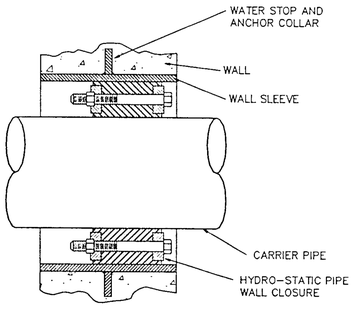

PIPE THRU WALL PENETRATION SEAL DETAIL

NO SCALE

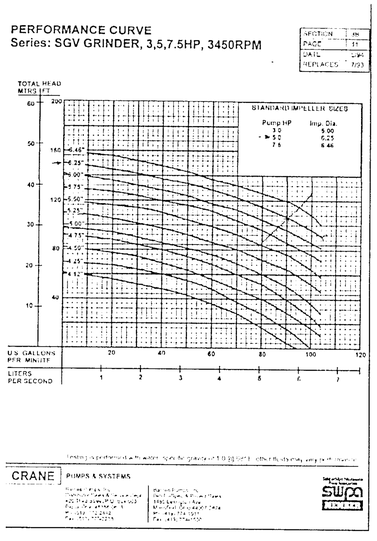

PUMP CURVES

NO SCALE

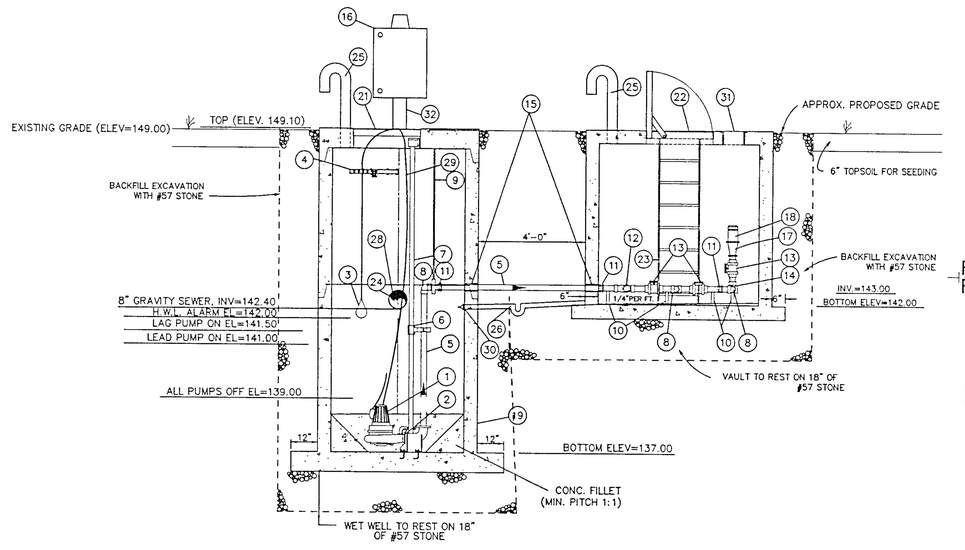

ELEVATION
PUMP STATION AND VALVE VAULT

SCALE: 3/8"=1'-0"

BCWH

ARCHITECTURE
INTERIORS
PLANNING
CONSULTING

207 West Broad Street
Richmond, Virginia 23220

804. 788. 4774 PHONE
804. 788. 0986 FAX

www. bcwh. com

SOUTH ELEMENTARY SCHOOL LAGOON CLOSURE, PUMP STATION AND FORCE MAIN

PRINCE GEORGE COUNTY SCHOOL BOARD

PRINCE GEORGE, VIRGINIA

© BCWH, Inc.

Material included herein is protected by copyright. Use of this material without written consent of BCWH, Inc. is prohibited.

PROJECT NUMBER:
20148-07

PROJECT MANAGER:
STEVE PELLEI

DRAWN BY:
N. MATHIS

ISSUE DATE:
JUNE 18, 2002

REVISIONS:

COMMONWEALTH OF VIRGINIA
BRIAN F. BORTELLI
No. 21266
6/18/02
PROFESSIONAL ENGINEER

FINAL PLANS FOR CONSTRUCTION

TIMMONS
CIVIL ENGINEERS
CORPORATE HEADQUARTERS
711 N. COURTHOUSE ROAD
RICHMOND, VIRGINIA 23236-4099
TELEPHONE: (804) 794-3500
FAX: (804) 794-7838

TIMMONS PROJECT #20148-07

SHEET TITLE:
PUMP STATION PLAN VIEW, ELEVATIONS AND SECTIONS

SHEET NUMBER:
13