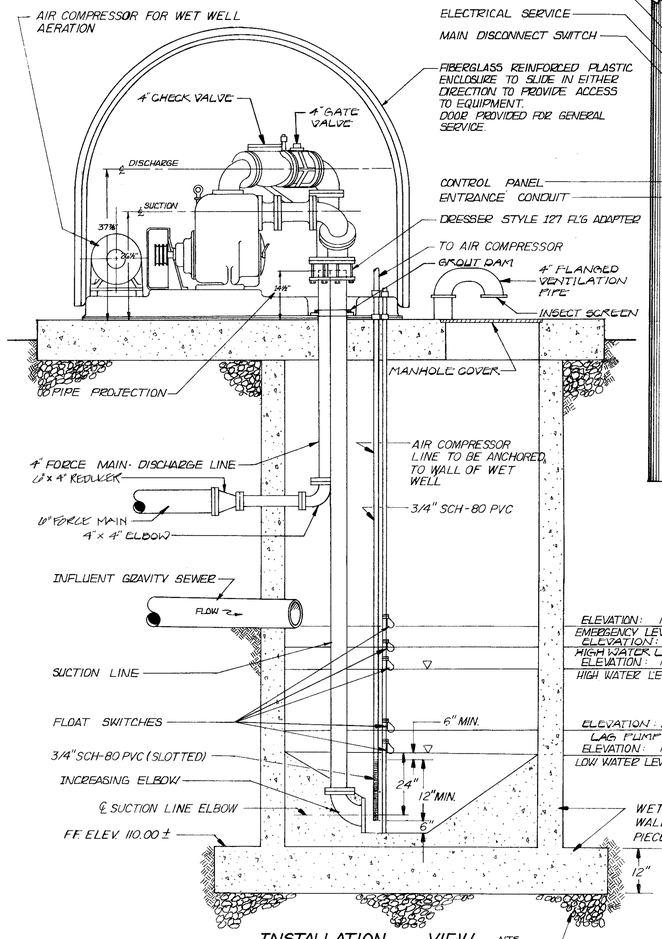


INSTALLATION VIEW NTS

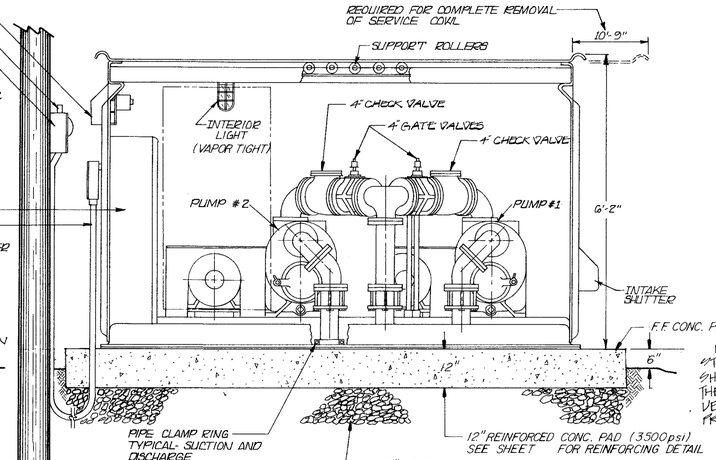


NOTE: THE PUMP STATION ELEVATION SHOWN IS APPROXIMATE. THE CONTRACTOR SHALL VERIFY THE ELEVATION PRIOR TO CONSTRUCTION.

NOTE: CONTRACTOR SHALL VERIFY THAT THE FOUNDATION SOIL IS CAPABLE OF LOAD BEARING CAPACITY OF 2500 psi.

FRONT VIEW NTS

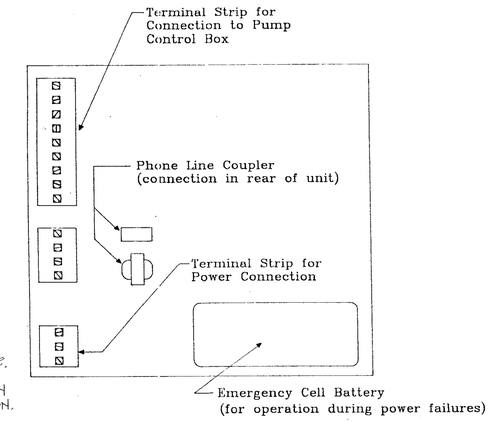


Schematic Detail – Automatic Dialer

(no scale)

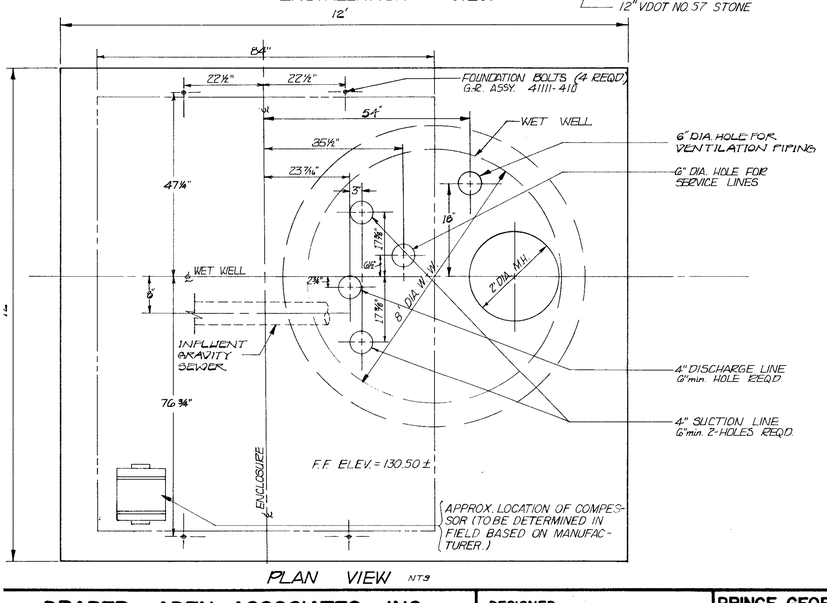


PLAN VIEW NTS

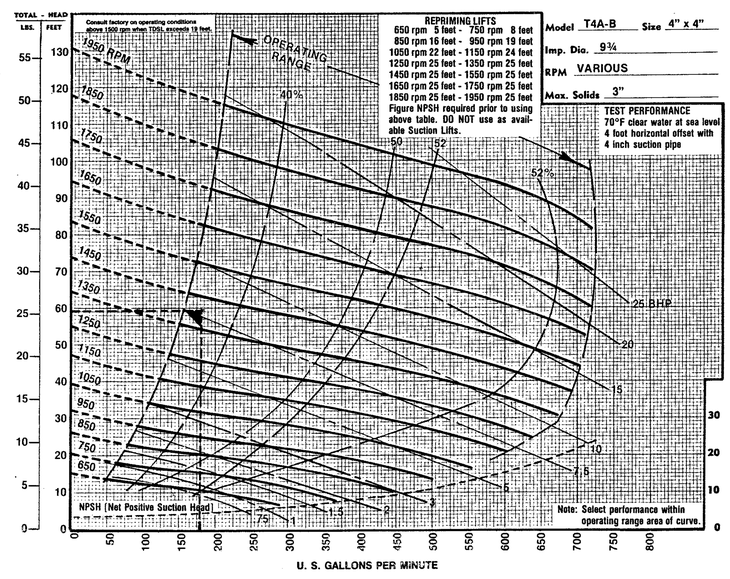


STATION PUMP CURVE

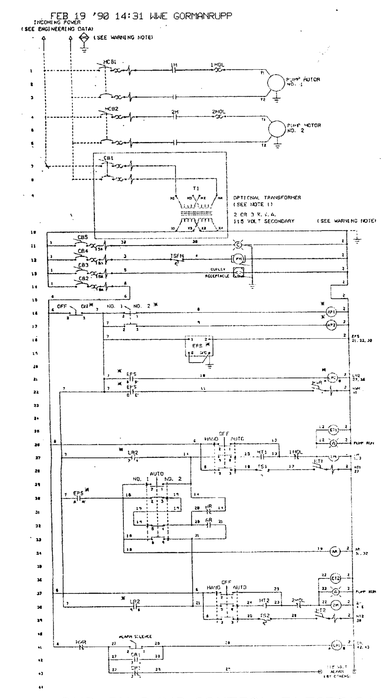


DUPLEX PUMP CONTROL ELECTRICAL DIAGRAM

NOT TO SCALE

RECEIVED
OCT 22 1991
VIRGINIA DEPT. OF HEALTH
OFFICE OF WATER PROGRAMS
SOUTHEAST VA REGIONAL OFFICE

PUMP STATION NOTES

1. THE CONTRACTOR SHALL FURNISH AND INSTALL ONE FACTORY-BUILT ABOVE GROUND FIBERGLASS REINFORCED AUTOMATIC PUMP STATION MANUFACTURED BY THE GORMAN-RUPP CO.

2. PUMPS SHALL BE HORIZONTAL, SELF-PRIMING SEWAGE PUMPS, SPECIFICALLY DESIGNED FOR PUMPING RAW, UNSCREENED, DOMESTIC SANITARY SEWAGE. PUMPS SHALL HAVE A 4" SUCTION CONNECTION, AND A 4" DISCHARGE CONNECTION.

3. THE 4" X 4" PUMPS HAVE BEEN DESIGNED TO OPERATE UNDER THE FOLLOWING CONDITIONS: 180 GPM @ 59.3 FEET OF TDH; MOTOR SIZE = 15 HP; APPROX. FREQUENCY = 1400 RPM; IMP. DIA. = 9-3/4".

4. THE AIR COMPRESSOR SHALL BE OIL-LESS WITH A MINIMUM CAPACITY OF 0.3 CFM @ 10 PSI RATED FOR CONTINUOUS DUTY. THE CONTRACTOR SHALL INSTALL THE AIR COMPRESSOR AND POWER CONNECTIONS. THE COMPRESSOR SHALL BE CONNECTED TO A TIME CLOCK AND SET BY THE COUNTY BASED ON DETENTION TIMES IN THE WET WELL.

5. A 3/4" POTABLE WATER SERVICE CONNECTION SHALL BE PROVIDED AND EQUIPPED WITH AN APPROVED BACKFLOW PREVENTION DEVICE.

ELECTRICAL NOTES

1. THE PUMP STATION AS FURNISHED BY THE MANUFACTURER SHALL BE COMPLETELY WIRED, EXCEPT FOR THE POWER FEEDER LINES. THE AUTOMATIC REMOTE DIALER SHALL BE WIRED AND INSTALLED BY THE MANUFACTURER.

2. ALL WIRING, WORKMANSHIP AND SCHEMATIC WIRING DIAGRAMS SHALL BE IN COMPLIANCE WITH APPLICABLE STANDARDS AND SPECIFICATIONS FOR INDUSTRIAL CONTROLS SET FORTH BY THE JOINT INDUSTRIAL COUNCIL (JIC), NATIONAL MACHINE TOOL BUILDERS ASSOCIATION (NMTBA), AND NATIONAL ELECTRICAL CODE (NEC).

COMMONWEALTH OF VIRGINIA
FREDERICK T. M. PRIBBLE
No. 10055
PROFESSIONAL ENGINEER

| | | | | | |
|---|---|---|---|---|---|
| DRAPER – ADEN ASSOCIATES, INC. CONSULTING ENGINEERS RICHMOND, VIRGINIA | DESIGNED TSC<br>DRAWN PCB<br>CHECKED FTP<br>DATE 1/31/90 | PRINCE GEORGE WATER & SEWER EXTENSIONS<br>RTE. 630/KING SUBDIVISION ADDITION<br>COUNTY OF PRINCE GEORGE, VIRGINIA | PUMP STATION DETAILS | REVISIONS: | SCALE: AS NOTED<br>PLAN Nº T-20213 | SHEET 13 OF 13 |

american blueprint of columbia