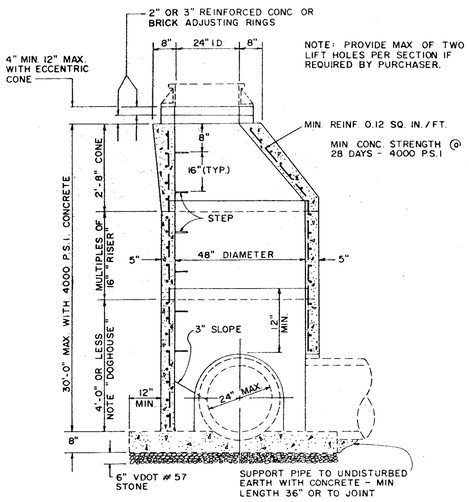

PRECAST CONCRETE MANHOLE

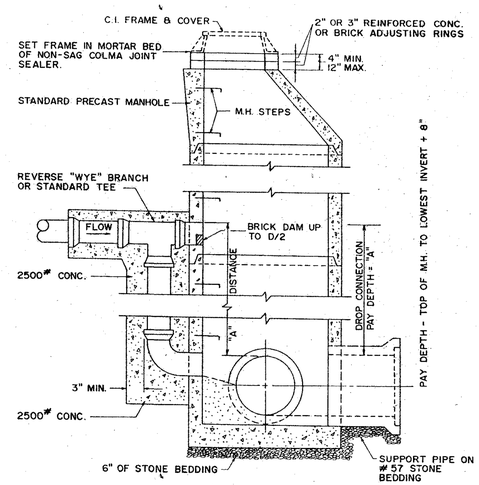

NOTE: WHERE "A" DISTANCE IS LESS THAN 2'-6" THE INCOMING SEWER SHALL BE LOWERED SO THAT THE TOP OF THE INCOMING SEWER IS NOT MORE THAN 6 INCHES ABOVE THE OUTGOING SEWER.

WHERE "A" DISTANCE IS GREATER THAN 2'-6" USE STANDARD DROP CONNECTION.

CONC. ENCASEMENT MAY BE ELIMINATED IF D.I. PIPE AND FITTINGS ARE USED FOR DROP CONNECTION.

STANDARD DROP CONNECTION

NOT TO SCALE

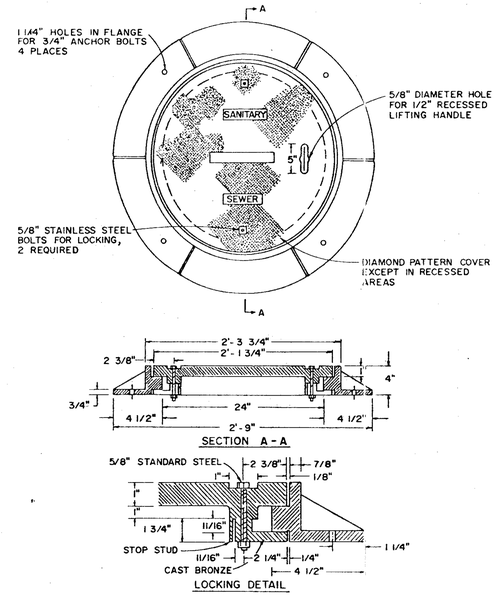

LOCK TYPE MANHOLE

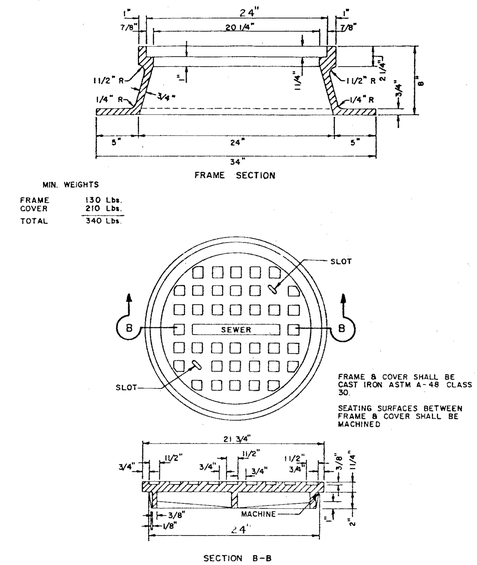

STANDARD MANHOLE FRAME & COVER

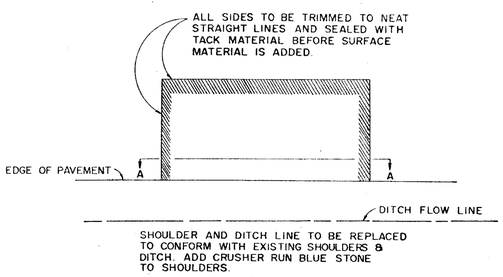

PLAN

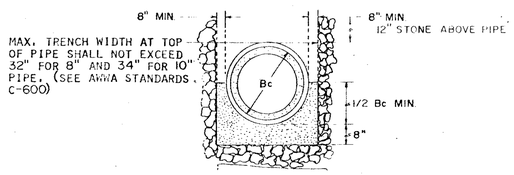

NOTE: THE COMPACTED STONE SHALL BE VDOT TYPE 57 OR 68 COMPACTED TO 95% DENSITY.

TYPICAL TRENCH IN ROCK

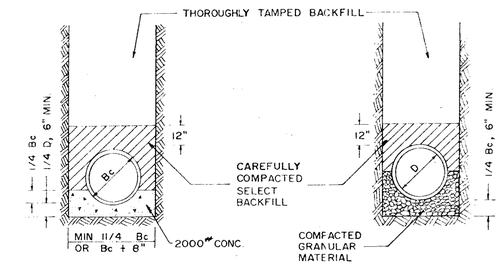

CLASS "A"
CONCRETE CRADLE
LOAD FACTOR = 2.8

CLASS "B"
LOAD FACTOR = 1.9

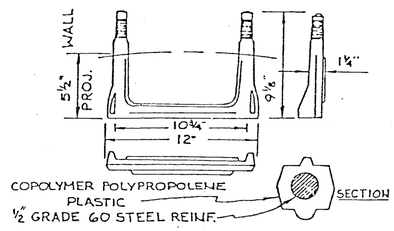

MANHOLE STEP DETAIL

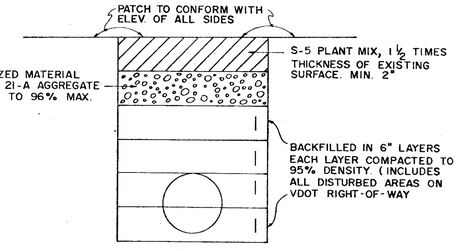

SECTION A-A

NOTE: BOTTOM AND ALL SIDES OF CUT TO BE PRIMED WITH ASPHALT PRIOR TO PLACING PLANT MIX.

IF CUT IS MADE IN GRAVEL ROADWAY, 2" PLANT MIX SURFACE TO BE DELETED AND TOP 12" OF STABILIZED BASE IS TO CONFORM WITH THE EXISTING SURFACE. EACH PAVEMENT CUT SHALL BE COVERED WITH A TEMPORARY OR PERMANENT ASPHALT PATCH THE SAME DAY EXCAVATION IS MADE.

PAVEMENT PATCH DETAIL

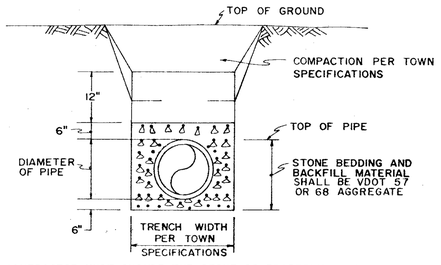

NOTE: CONTRACTOR MUST INSURE THE STONE IS PROPERLY COMPACTED, ESPECIALLY UNDER THE HAUNCHES OF THE PIPE.

THOROUGHLY COMPACTED FILL AREA TO BE FREE OF CLODS, DEBRIS, ETC.

BEDDING AND BACKFILL DETAIL FOR PVC PIPE

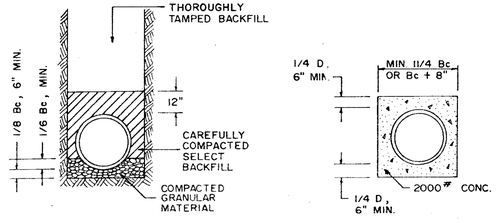

CLASS "C"
LOAD FACTOR = 1.5

CONCRETE ENCASEMENT
LOAD FACTOR = 4.5

TRENCH BEDDING

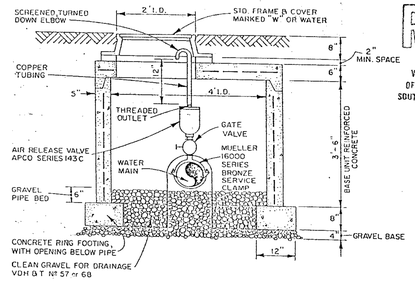

AIR RELEASE VALVE

RECEIVED
OCT 23 1991
VIRGINIA DEPT. OF HEALTH
OFFICE OF WATER PROGRAMS
SOUTHEAST VA. REGIONAL OFFICE

COMMONWEALTH OF VIRGINIA
FREDERICK T. M. PRIBBLE
No. 10055
PROFESSIONAL ENGINEER

DRAPER – ADEN ASSOCIATES, INC. CONSULTING ENGINEERS RICHMOND, VIRGINIA	DESIGNED T.S.C. DRAWN N.J.H. CHECKED F.T.P. DATE 1/31/90	PRINCE GEORGE WATER & SEWER EXTENSIONS **RTE.630/KING SUBDIVISION ADDITION** COUNTY OF PRINCE GEORGE, VIRGINIA	MISCELLANEOUS SEWER DETAILS	REVISIONS:	SCALE: NOT TO SCALE PLAN Nº T-20213	SHEET 12 OF 13

american blueprint of columbia