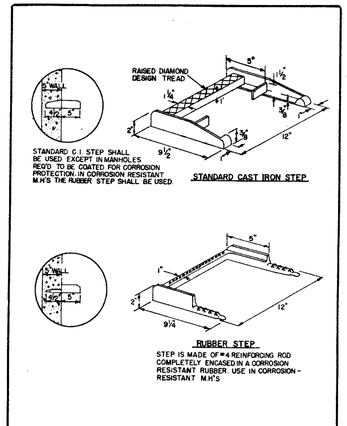

STEPS FOR PRECAST MANHOLES

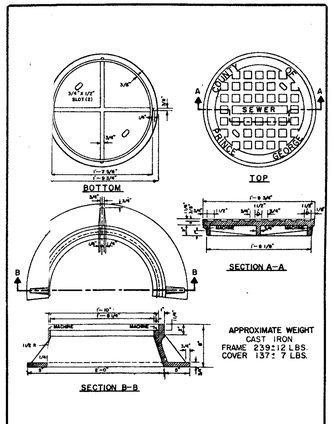

MANHOLE FRAME AND COVER

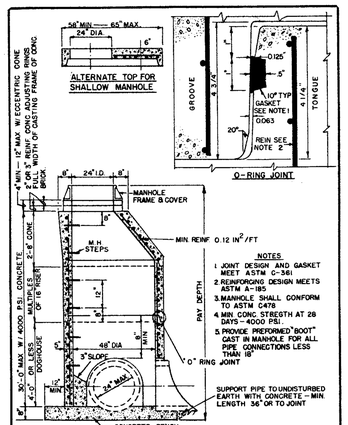

PRE-CAST CONCRETE MANHOLE

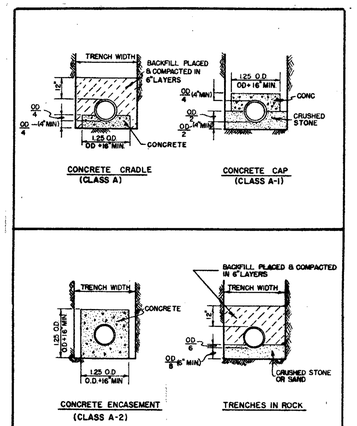

SPECIAL PIPE BEDDING

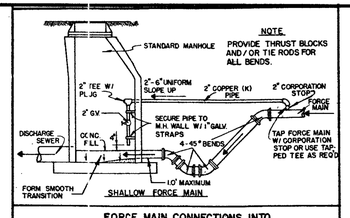

FORCE MAIN CONNECTIONS INTO MANHOLES

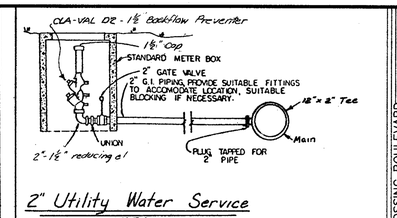

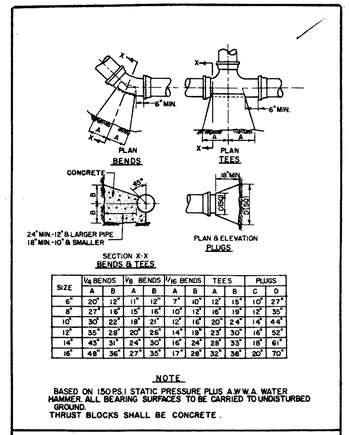

BENDS & TEES

SIZE	1/8 BENDS		1/4 BENDS		1/16 BENDS		TEES		PLUGS	
	A	B	A	B	A	B	A	B	C	D
6"	20"	12"	11"	12"	7"	12"	15"	10"	27"	
8"	27"	16"	15"	16"	10"	12"	16"	19"	12"	35"
10"	30"	20"	18"	20"	12"	16"	20"	24"	14"	44"
12"	35"	28"	20"	26"	14"	18"	23"	30"	16"	52"
14"	43"	31"	24"	30"	16"	24"	28"	33"	18"	61"
16"	48"	36"	27"	35"	17"	28"	32"	36"	20"	70"

NOTE

BASED ON 150 PSI STATIC PRESSURE PLUS A.W.W.A. WATER HAMMER. ALL BEARING SURFACES TO BE CARRIED TO UNDISTURBED GROUND.
THRUST BLOCKS SHALL BE CONCRETE.

THRUST BLOCKS

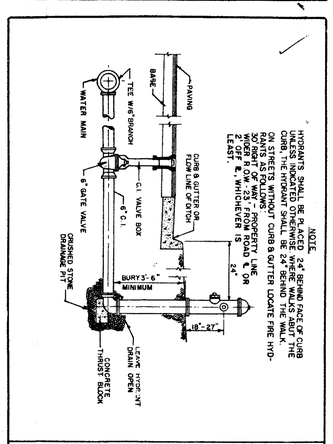

FIRE HYDRANT SETTING

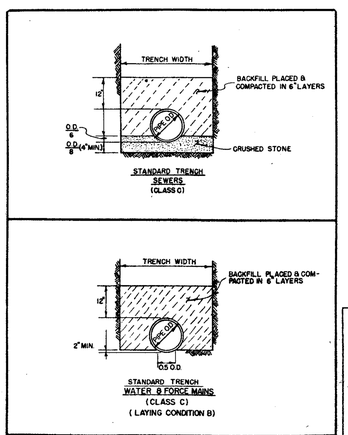

STANDARD PIPE BEDDING

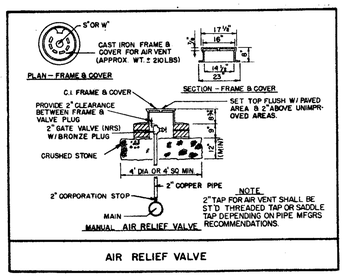

AIR RELIEF VALVE

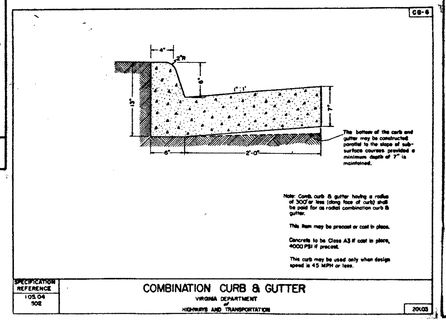

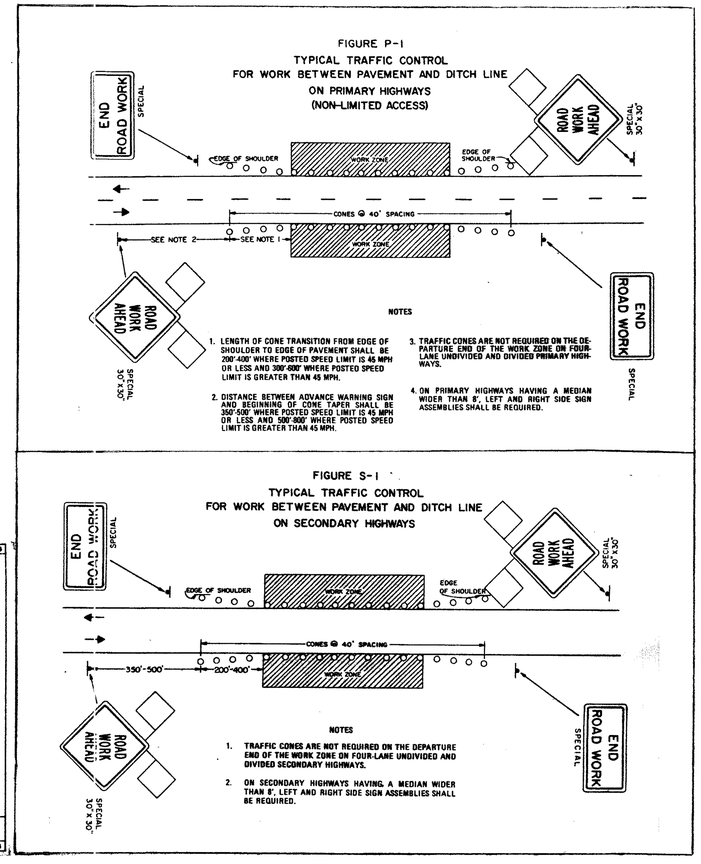

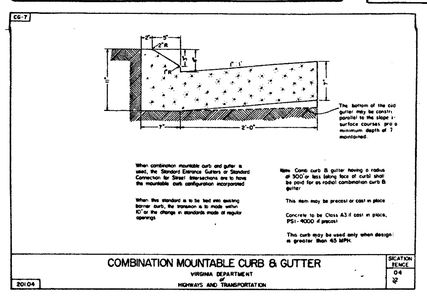

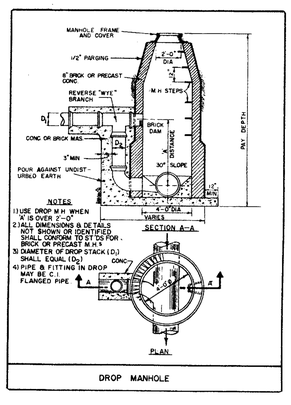

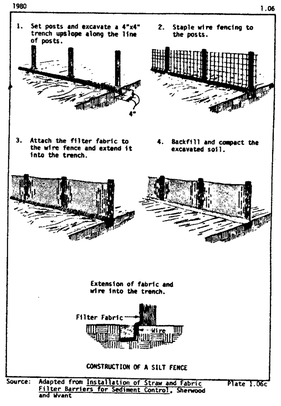

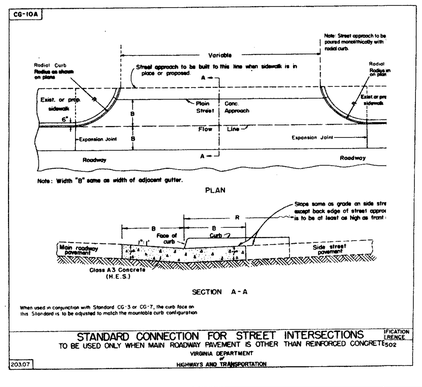

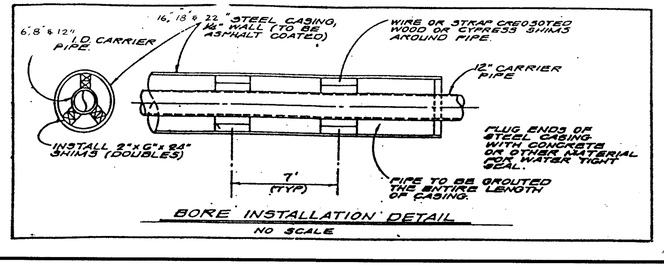

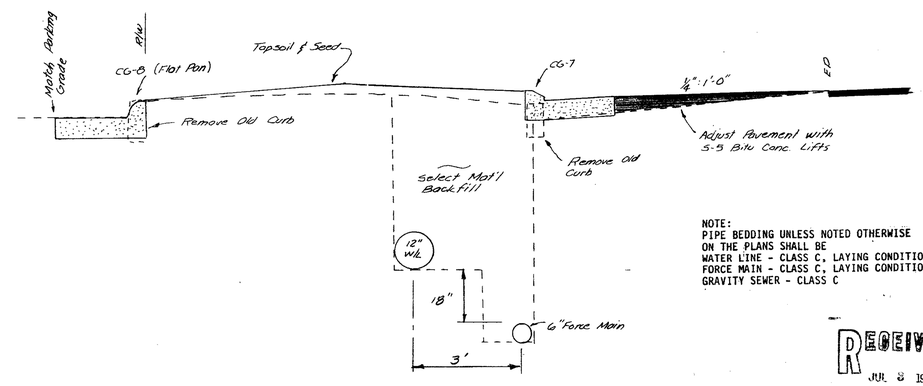

CURB REPAIR AT SMITTY'S TRUCKSTOP

SCALE: 1" = 2'

NOTE:
PIPE BEDDING UNLESS NOTED OTHERWISE ON THE PLANS SHALL BE
WATER LINE - CLASS C, LAYING CONDITION B
FORCE MAIN - CLASS C, LAYING CONDITION B
GRAVITY SEWER - CLASS C

RECEIVED
JUL 8 1988
VIRGINIA DEPT. OF HEALTH
OFFICE OF WATER PROGRAMS
SOUTHEAST VA. REGIONAL OFFICE

COMMONWEALTH OF VIRGINIA
WALTER M. ALTMAN III
LICENSE No. 11039
PROFESSIONAL ENGINEER

711 NORTH COURTHOUSE ROAD
RICHMOND, VIRGINIA 23236
TELEPHONE: (804) 794-3500

8803 STAPLES MILL ROAD
RICHMOND, VIRGINIA 23228
TELEPHONE: (804) 262-7396

3411 CROSSING BOULEVARD
PRINCE GEORGE, VIRGINIA 23875
TELEPHONE: (804) 458-8685

ENGINEERS * ARCHITECTS * SURVEYORS * PLANNERS * LANDSCAPE ARCHITECTS

DATE	REVISION DESCRIPTION
6-30-89	GEN. REV.

DATE 12-12-88
DRAWN BY J.B.P.
DESIGNED BY W.M.A. III
CHECKED BY W.M.A. III
SCALE N.T.S.

Prince George Industrial Water and Sewer Improvements
Rives and Templeton District * Prince George Co., Va.

DETAILS

SHEET NO. 12 of 12
JOB NO. 14044