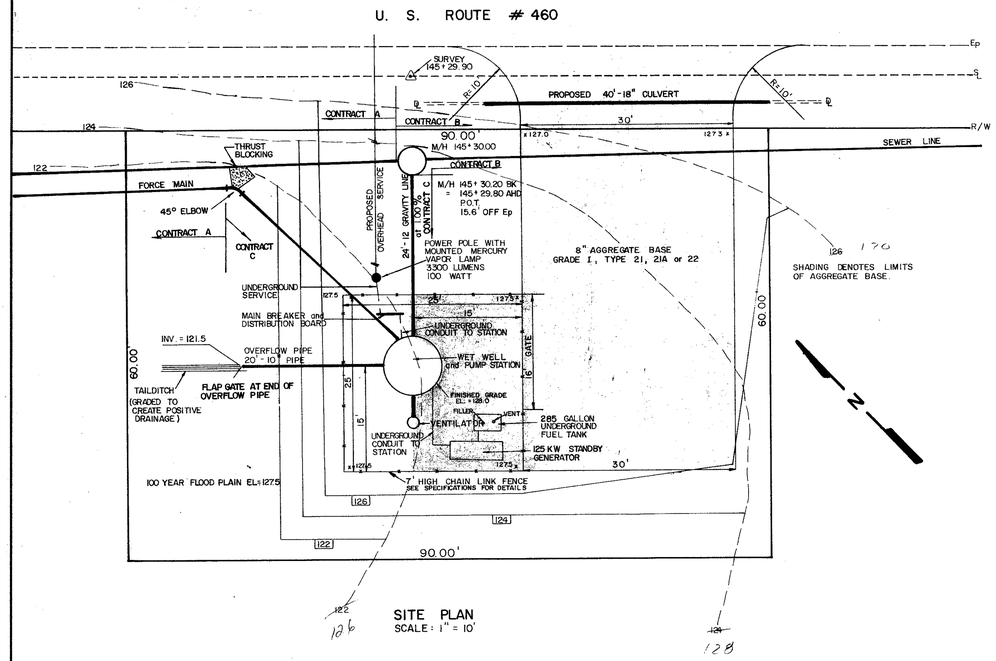

SITE PLAN
SCALE: 1" = 10'

BORING DETAIL
NO SCALE

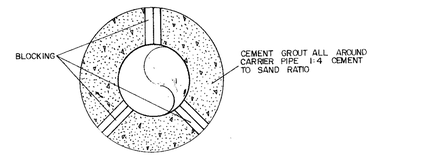

CASING	CARRIER
12" x 1/4"	6"
15" x 1/4"	8"
18" x 1/4"	10"
21" x 3/8"	12"
24" x 3/8"	15"
27" x 1/2"	18"

CASING SIZE BASED ON PVC PIPE IF OTHER THAN PVC PIPE IS USED THEN CONTRACTOR SHALL ADJUST CASING SIZE ACCORDINGLY.

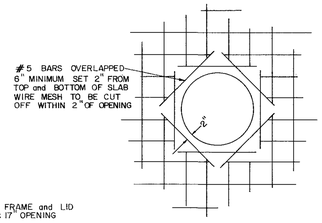

DETAIL
TOP SLAB OPENINGS
NO SCALE

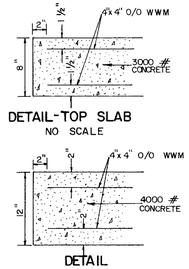

DETAIL-TOP SLAB
NO SCALE

DETAIL
FOOTING SLAB
NO SCALE

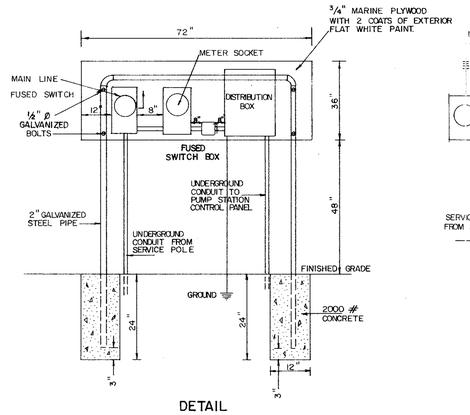

DETAIL
SERVICE BOARD
NO SCALE

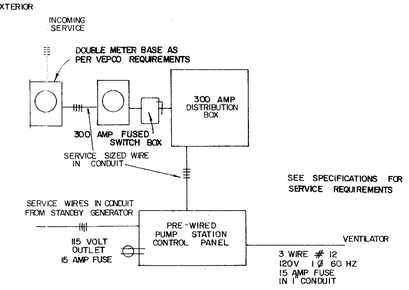

SCHEMATIC DETAIL
ELECTRICAL LAYOUT
NO SCALE

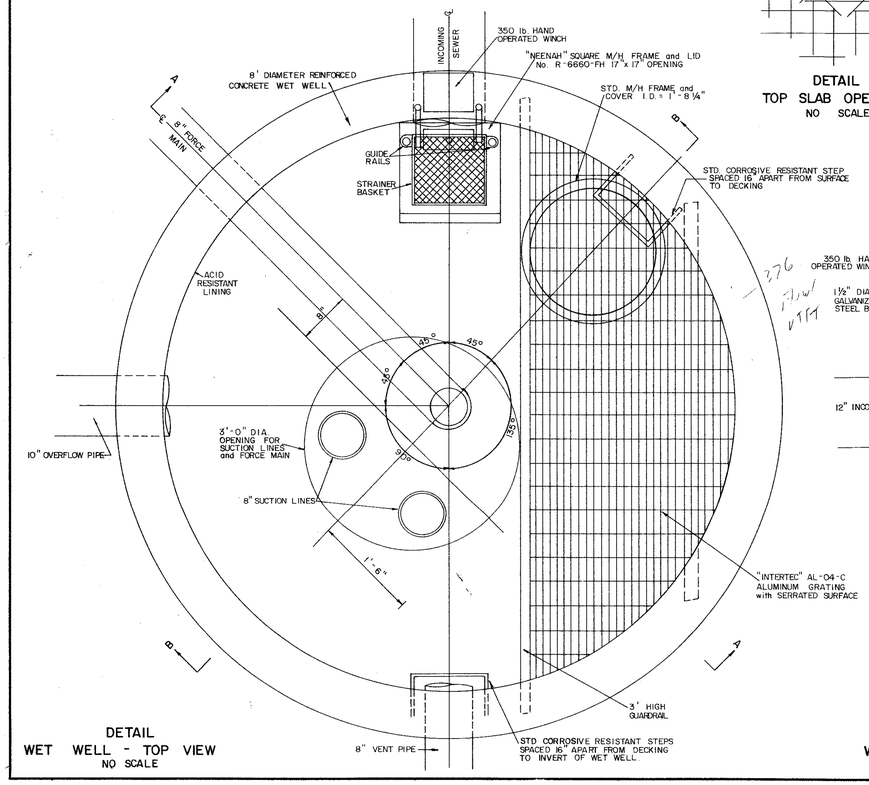

DETAIL
WET WELL - TOP VIEW
NO SCALE

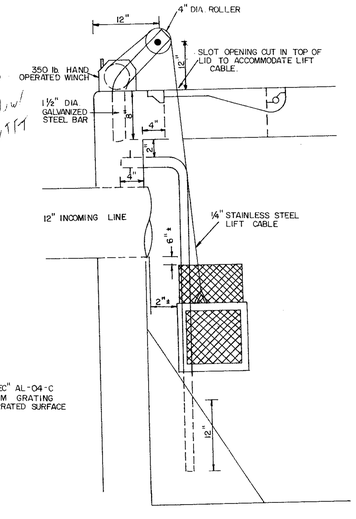

DETAIL
WET WELL BASKET and WINCH
NO SCALE

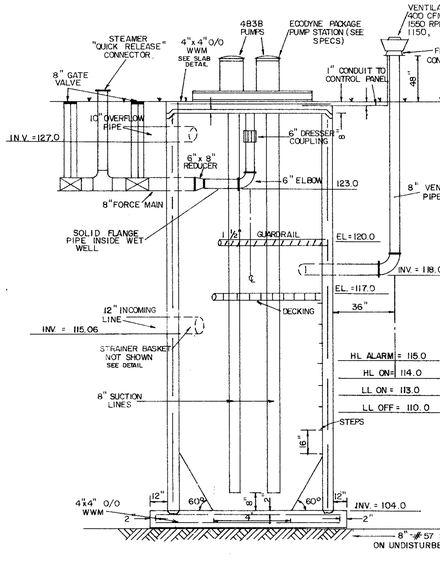

SECTION A-A
NO SCALE

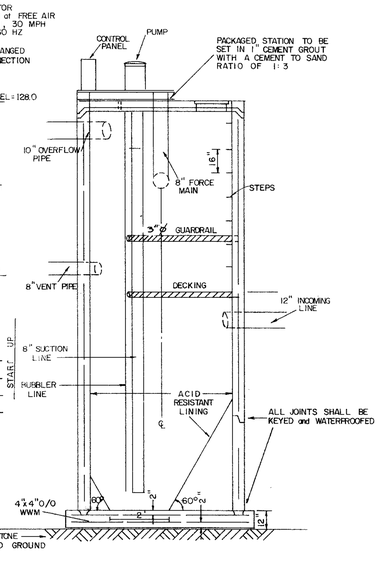

SECTION B-B
NO SCALE

SITE PLAN and DETAILS
PUMP STATION No. 1
U. S. ROUTE #460 TRUNK SEWER

SCALE: AS SHOWN	APPROVED BY: TJC 4/9/82 TJC 7/13/82	DRAWN BY HJM
DATE: 4/8/82		REVISED

PRINCE GEORGE COUNTY, VIRGINIA
CHARLES C. TOWNES & ASSOCIATES
CIVIL ENGINEERS, PLANNERS, LAND SURVEYORS
COLONIAL HEIGHTS, VIRGINIA
DRAWING NUMBER

REVISE 7/13/82

16

A & E SUPPLY CO. 44-132-49317