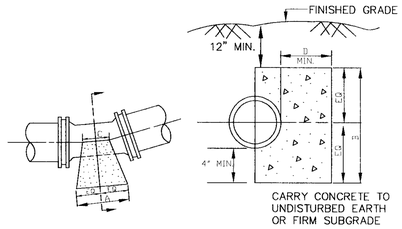

PIPE SIZE	11 1/4 BEND				22 1/2° BEND				45° BEND				90° BEND			
	A	B	C	D	A	B	C	D	A	B	C	D	A	B	C	D
4"	6"	1'-0"	4"	6"	8"	1'-0"	6"	7"	1'-1"	1'-0"	6"	6"	1'-10"	1'-0"	6"	1'-6"
6"	8"	1'-2"	6"	7"	10"	1'-2"	6"	8"	1'-4"	1'-2"	6"	8"	2'-3"	1'-2"	6"	1'-6"
8"	8"	1'-4"	8"	7"	1'-4"	1'-4"	8"	8"	2'-0"	1'-4"	8"	9"	3'-3"	1'-4"	8"	1'-6"
10"	1'-1"	1'-6"	8"	8"	1'-7"	1'-6"	8"	10"	2'-6"	1'-6"	8"	10"	3' 9"	2'-0"	10"	1'-6"
12"	1'-4"	1'-8"	1'-0"	9"	2' 0"	1'-8"	1'-0"	1'-0"	3'-3"	1'-8"	1'-0"	1' 0"	5'-0"	2' 0"	10"	1'-6"
16"	1'-9"	2'-0"	1'-0"	9"	2'-6"	2'-0"	1'-0"	1'-3"	4'-3"	2'-6"	1'-0"	1'-3"	6'-0"	2'-6"	1'-4"	1' 9"
18"	1'-9"	2'-6"	1'-0"	10"	3'-3"	2'-6"	1'-0"	1'-6"	6' 0"	2'-6"	1'-0"	1'-4"	8'-0"	3'-4"	1'-8"	1'-9"
20"	1' 9"	2' 6"	1'-0"	10"	3'-3"	2'-6"	1'-0"	1' 6"	6'-0"	2'-6"	1'-0"	1'-4"	8'-0"	3'-4"	1'-8"	1' 9"
24"	2'-0"	3'-0"	1'-0"	1'-0"	3'-9"	3'-0"	1'-0"	1' 6"	7'-0"	3'-0"	1'-0"	1'-9"	9'-9"	4'-0"	2'-0"	2' 0"

NOTE:
1) BLOCKING DIMENSIONS ARE SHOWN AT A MINIMUM.
2) BLOCKING DIMENSIONS ARE BASED ON A STATIC PRESSURE OF 150 PSI AND AN ALLOWABLE SOIL BEARING CAPACITY OF 2000 PSF.
3) WHERE SOIL BEARING CAPACITY IS LESS THAN OR GREATER THAN 2000 PSF, BLOCKING DESIGN CALCULATION ARE TO BE SHOWN ON THE PLANS.
4) FITTINGS TO BE WRAPPED IN 4 MIL POLYETHYLENE TO PROTECT NUTS AND BOLTS.

BLOCKING DETAIL
(HORIZONTAL BENDS)
NOT TO SCALE

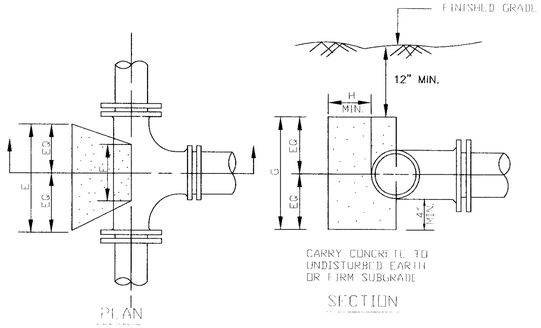

BRANCH SIZE	E	F	G	H
4"	1'-0"	8"	1'-4"	6"
6"	1'-4"	1'-0"	1'-8"	8"
8"	1'-6"	1'-0"	2'-6"	9"
10"	2'-2"	1'-0"	2'-8"	10"
12"	2'-6"	1'-0"	3'-6"	1'-0"
16"	3'-4"	1'-4"	4'-8"	1'-2"
18"	4'-0"	2'-0"	6'-0"	1'-6"
20"	4'-0"	2'-0"	6'-0"	1'-6"
24"	5'-0"	2'-0"	6'-8"	1'-8"

NOTE:
SEE APPLICABLE NOTES AS SHOWN ON BLK-1.

BLOCKING DETAIL
(TEES)
NOT TO SCALE

NOTE:
SEE APPLICABLE NOTES AS SHOWN ON BLK-1.

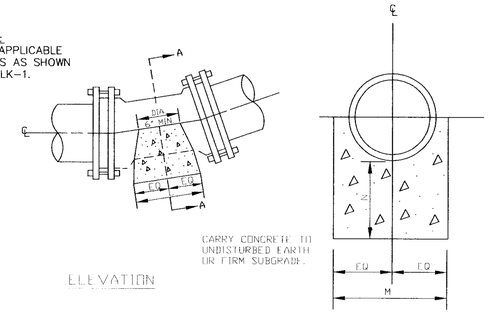

PIPE SIZE	11-1/4° BEND			22-1/2° BEND			45° BEND		
	L	M	N	L	M	N	L	M	N
6"	6"	1' 2"	8"	10"	1'-2"	8"	1'-2"	1'-2"	8"
8"	8"	1'-4"	8"	11"	1'-4"	8"	1'-9"	1'-4"	8"
10"	8"	1'-6"	8"	1' 3"	1'-6"	9"	2'-5"	1'-6"	1'-0"
12"	8"	2'-0"	8"	1'-4"	2'-0"	9"	2'-8"	2'-0"	1'-2"
16"	1'-1"	2'-4"	9"	2'-1"	2'-4"	1'-0"	4'-0"	2'-4"	1'-6"
18"	1' 5"	2'-8"	10"	2'-9"	2'-8"	1' 2"	5'-6"	2'-8"	2' 0"
20"	1' 5"	2'-8"	10"	2'-9"	2'-8"	1'-2"	5'-6"	2'-8"	2'-0"
24"	1'-10"	3'-0"	1'-0"	3'-7"	3'-0"	1'-4"	6'-0"	3'-6"	2'-6"

NOTE: BLOCKING BASED ON PRESSURE OF 150 PSI AND ALLOWABLE SOIL BEARING CAPACITY OF 2000 PSF. CONCRETE TO BE 3000 PSI.

BLOCKING DETAIL
(LOWER VERTICAL BENDS)
NOT TO SCALE

NOTES:
SEE APPLICABLE NOTES AS SHOWN ON BLK-1.

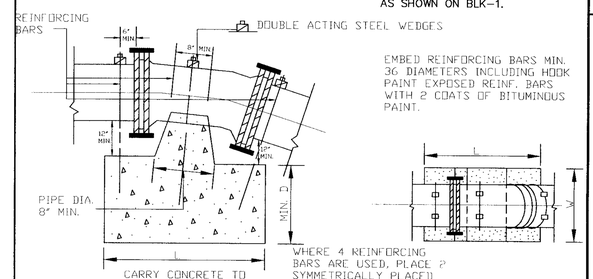

PIPE SIZE	11 1/4 BEND				22 1/2 BEND				45° BEND			
	L	W	D	REINF. BAR # & SIZE	L	W	D	REINF. BAR # & SIZE	L	W	D	REINF. BAR # & SIZE
6"	2'-0"	2'-0"	1'-6"	3 # 7	2'-6"	2'-6"	2'-0"	3 # 7	3'-0"	3'-0"	2'-0"	3 # 7
8"	2'-0"	2'-0"	2'-0"	3 # 8	2'-9"	2'-9"	2'-3"	3 # 8	3'-6"	3'-6"	2'-6"	3 # 8
10"	2'-3"	2'-3"	2' 0"	3 # 8	3'-6"	3'-6"	2'-3"	3 # 8	4'-0"	4'-0"	2'-9"	4 # 8
12"	2'-6"	2'-6"	2'-3"	3 # 8	4'-0"	4'-0"	2'-6"	4 # 8	4'-6"	4'-6"	3'-0"	4 # 8
16"	3'-3"	3'-3"	2'-6"	3 # 8	4'-6"	4'-6"	3'-0"	4 # 8	6'-0"	6'-0"	3'-6"	4 # 8
18"	4'-0"	4'-0"	2'-6"	3 # 10	5'-6"	5'-6"	3'-6"	3 # 10	7'-6"	7'-6"	4'-0"	4 # 10
20"	4'-0"	4'-0"	2'-6"	3 # 10	5'-6"	5'-6"	3'-6"	3 # 10	7'-6"	7'-6"	4'-0"	4 # 10
24"	4'-6"	4'-6"	3'-0"	3 # 10	6'-0"	6'-0"	4'-0"	4 # 10	8'-6"	8'-6"	4'-6"	4 # 10

NOTE: BLOCKING BASED ON PRESSURE OF 150 PSI AND ALLOWABLE SOIL BEARING CAPACITY OF 2000 PSF. CONCRETE TO BE 3000 PSI.

BLOCKING DETAIL
(UPPER VERTICAL BENDS)
NOT TO SCALE

NOTE:
TEST STATIONS TO BE INSTALLED DIRECTLY OVER WATER MAIN.

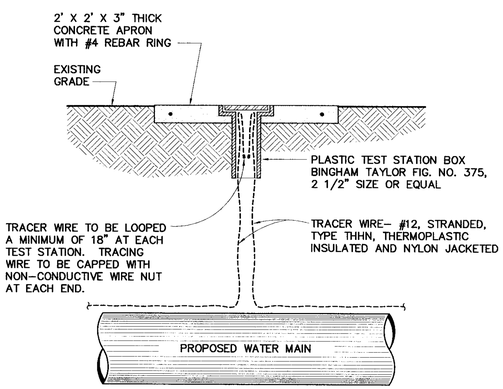

NOTE:
TEST BOXES TO BE SPACED AT 500' MAXIMUM INTERVALS. OTHER APPURTENANCES (VALVE BOXES....) MAY BE USED AS TEST STATIONS IF APPROVED BY COUNTY INSPECTOR.

TEST BOX/TRACER WIRE DETAIL
NOT TO SCALE

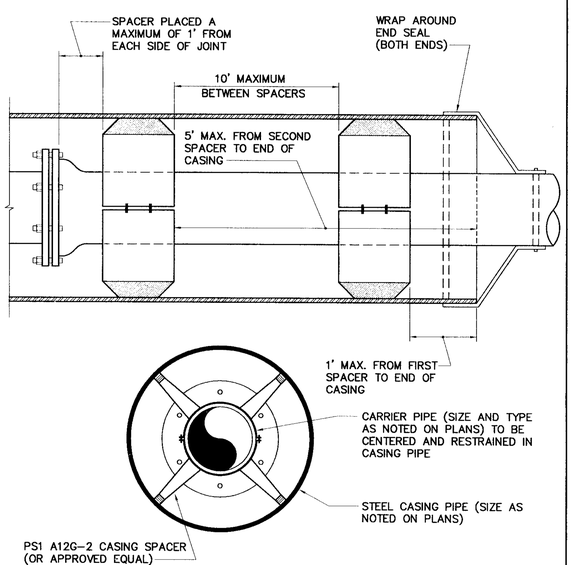

PIPE ENCASEMENT DETAIL
NOT TO SCALE

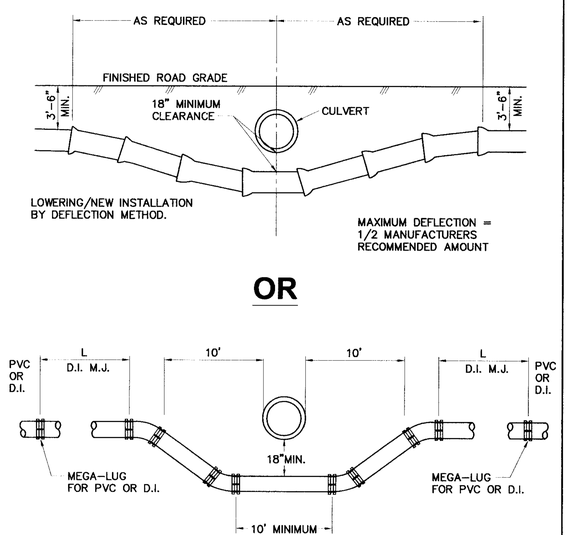

LOWERED SECTION TO BE OF DUCTILE IRON MECHANICAL JOINT PIPE WITH RESTRAINED JOINTS AT ANY INCLUDED JOINTS. THE ENGINEER SHALL CALCULATE LENGTH OF RESTRAINED SECTION.

THRUST BLOCKS FOR VERTICAL BENDS MAY BE DELETED WITH RESTRAINED JOINTS.

METHOD FOR LOWERING WATER MAIN
NOT TO SCALE

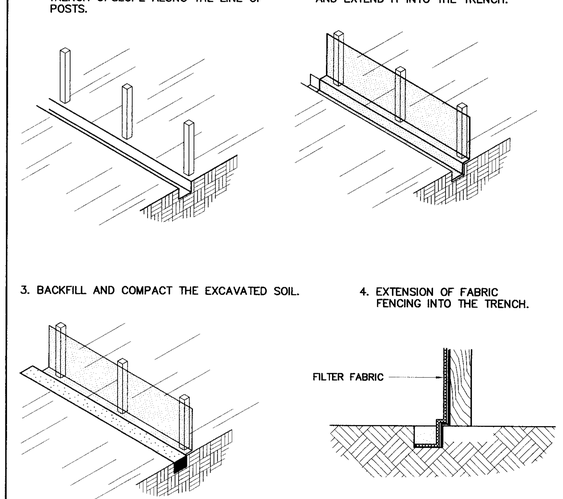

CONSTRUCTION OF A SILT FENCE
NOT TO SCALE

COMMONWEALTH OF VIRGINIA
MICHAEL S. HAGGERTY
No. 035201
7/7/06
PROFESSIONAL ENGINEER

Draper Aden Associates
Engineering • Surveying • Environmental Services
Blacksburg, VA
Charlottesville, VA
Hampton Roads, VA
Richmond, VA
8090 Villa Park Drive
Richmond, VA 23228
804-264-2228 Fax: 804-264-8773
www.daa.com

DETAILS
ROUTE 301/INTERSTATE 95 WATER SYSTEM
PRINCE GEORGE COUNTY, VIRGINIA

REVISIONS
5/26/06-
PER COUNTY COMMENTS

DESIGNED BY:	MSH
DRAWN BY:	HLJ
CHECKED BY:	JPK
SCALE:	AS NOTED
DATE:	03/01/06
PROJECT NUMBER:	R05274-01F

P:\R05200\05274\R05274-01F\CAD\274-01F-Map\R05274-01-DET1.DWG Jun 30, 2006 10:58am