NOTE: MINIMUM DISTANCE BETWEEN HYDRANT AND FACE OF CURB SHALL BE 24 INCHES. (WHERE APPLICABLE)

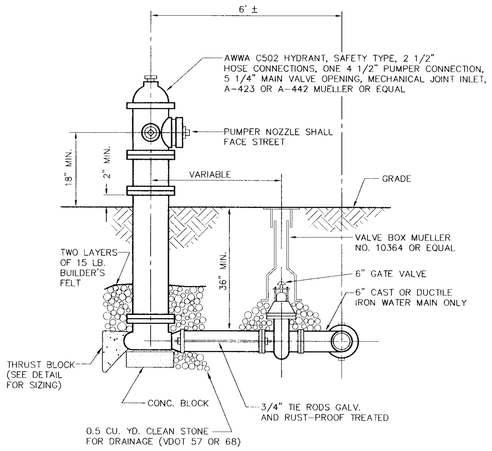

FIRE HYDRANT ASSEMBLY
NOT TO SCALE

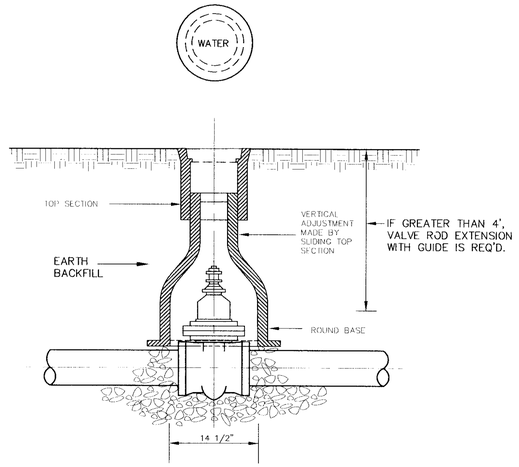

USE STANDARD DESIGNED VALVE BOX OF THE APPROPRIATE LENGTH (HEIGHT) UTILIZING APPROVED MANUFACTURERS OF VALVE BOX APPURTENANCES.

VALVE BOX DETAIL
NOT TO SCALE

NOTES:

1. SADDLES SHALL BE USED FOR ALL 1 1/2" AND 2" TAPS.
2. WATER SERVICE LATERALS FOR 1 1/2" AND 2" SERVICES WILL BE TYPE-K HARD COPPER. CONNECTIONS FOR 1 1/2" AND 2" SERVICES WILL SWEAT 95/5 (LEADLESS) SOLDER AND A SUITABLE FLUX OR APPROVED COMPRESSION FITTINGS. ALL CONNECTIONS AT CORPORATION STOPS WILL BE APPROVED COMPRESSION FITTINGS.
3. TAPS SHOULD BE MADE AT THE SPRING LINE OF THE MAIN LINE.
4. YOKE MUST BE INSTALLED WITH A METER SPACER THAT WILL BE FURNISHED TO THE CONTRACTOR BY THE UTILITIES DEPARTMENT INSPECTOR. THE SPACER WILL BE REMOVED BY THE UTILITIES DEPARTMENT WHEN THE METER IS SET.

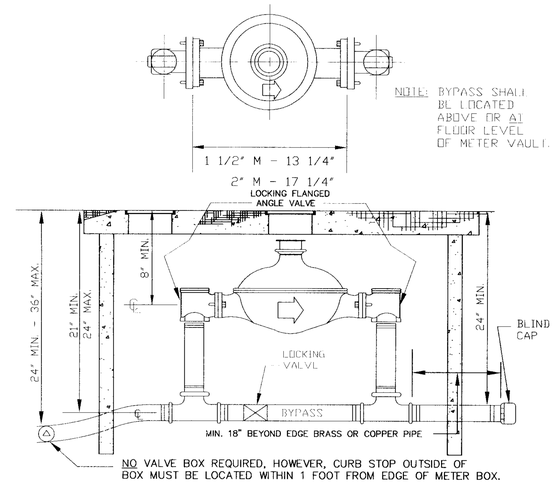

NO VALVE BOX REQUIRED, HOWEVER, CURB STOP OUTSIDE OF BOX MUST BE LOCATED WITHIN 1 FOOT FROM EDGE OF METER BOX.

1-1/2" OR 2" DISC METER SETTINGS
NOT TO SCALE

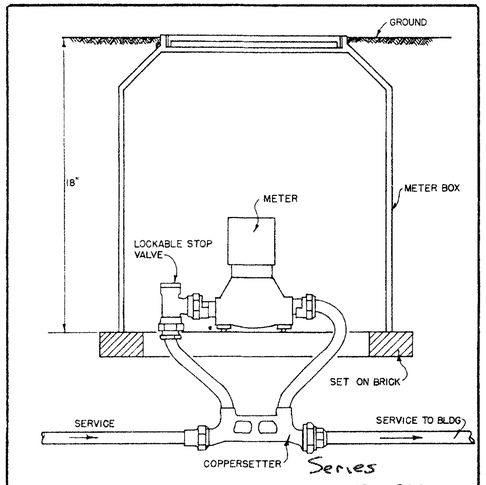

NOTE
DETAIL IS FOR 5/8" THRU 1" DISC METERS

METER SETTING

STANDARDS FOR
WATER AND WASTEWATER SYSTEMS
COUNTY OF PRINCE GEORGE
VIRGINIA

DATE 7-78 PLATE NO. 8

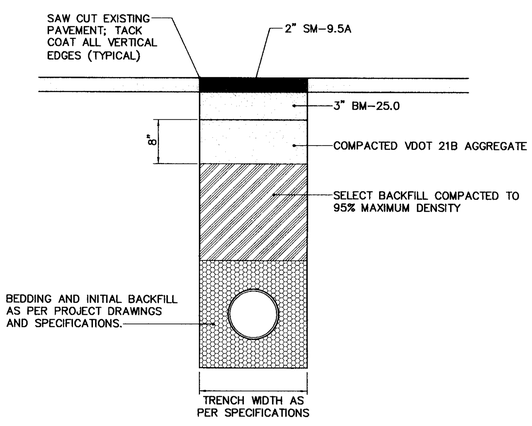

PRIVATE PAVEMENT REPAIR
NOT TO SCALE

NOTE: IN ROCK TRENCH, EXCAVATE AT LEAST 6" BELOW THE BELL OF THE PIPE.

NOTE: CLASS "C-1" BEDDING TO BE USED ONLY FOR PRESSURE LINES.

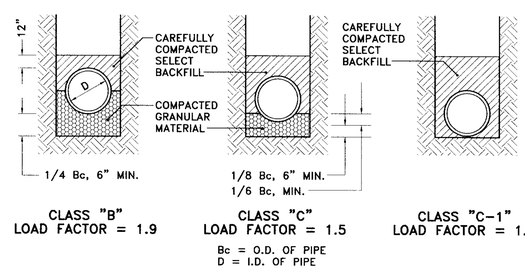

BEDDING DETAIL
NOT TO SCALE

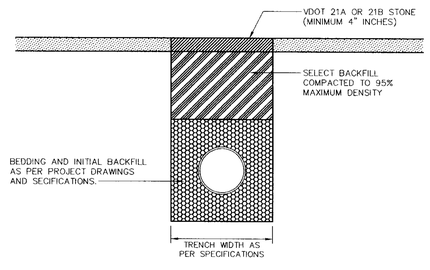

GRAVEL DRIVEWAY/PRIVATE ROAD REPAIR
NOT TO SCALE

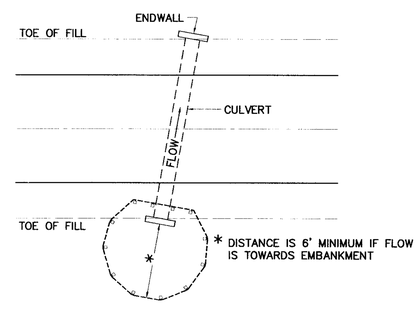

(IP) SILT FENCE CULVERT INLET PROTECTION
NOT TO SCALE

PIPE DIAMETER	FITTING TYPE	RESTRAINED JOINT LENGTH (L.F.) D.I. PIPE
12"	11 1/4° HORIZONTAL BEND	3
	22 1/2° HORIZONTAL BEND	6
	45° HORIZONTAL BEND	13
	90° HORIZONTAL BEND	31
	22 1/2° VERTICAL BEND (UPPER)	13
	22 1/2° VERTICAL BEND (LOWER)	4
	PLUG	65
	TEE (BRANCH) 12X8	1
	12X12	1
	12x8 REDUCER	
8"	45° HORIZONTAL BEND	9
	TEE (BRANCH): 8X4	1

RESTRAINED JOINT REQUIREMENTS

NOTES:

1. RESTRAIN 20 L.F. ON EITHER SIDE OF TEES ALONG PIPE RUN.
2. RESTRAINED JOINT LENGTHS FOR BENDS INDICATE LENGTH OF PIPE TO BE RESTRAINED ON EACH SIDE OF THE BEND.
3. A MINIMUM OF ONE FULL LENGTH OF PIPE SHALL BE RESTRAINED ON EACH SIDE OF ALL FITTINGS.
4. RESTRAINED JOINT LENGTHS FOR DUCTILE IRON WERE CALCULATED USING THE EBAA IRON INC.-RESTRAINED LENGTH CALCULATOR PROGRAM. ALL CALCULATIONS ASSUME TRENCH TYPE (4), SOIL TYPE (ML), SAFETY FACTOR (1 TO 1.5), DEPTH OF BURY (3.5 MIN.), AND TEST PRESSURE (150 PSI).

COMMONWEALTH OF VIRGINIA
MICHAEL S. HAGGERTY
No. 035201
3/30/07
PROFESSIONAL ENGINEER

Draper Aden Associates
Engineering • Surveying • Environmental Services
Blacksburg, VA
Charlottesville, VA
Hampton Roads, VA
Richmond, VA
8090 Villa Park Drive
Richmond, VA 23228
804-264-2228 Fax: 804-264-8773
www.dae.com

DETAILS
ROUTE 301/INTERSTATE 95 WATER SYSTEM
PRINCE GEORGE COUNTY, VIRGINIA

REVISIONS
5/26/06
PER COUNTY COMMENTS

DESIGNED BY: MSH
DRAWN BY: HLJ
CHECKED BY: JPK
SCALE: AS NOTED
DATE: 03/01/06
PROJECT NUMBER: R05274-01F

P:\R05274\R05274-01F\CAD\R05274-01F\DWG\R05274-01-DET1.DWG Apr 02, 2007 12:11am