NOTE: IN ROCK TRENCH, EXCAVATE AT LEAST 6" BELOW THE BELL OF THE PIPE.

NOTE: CLASS "C-1" BEDDING TO BE USED ONLY FOR PRESSURE LINES.

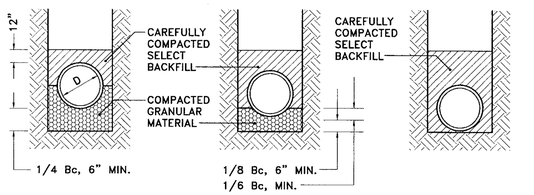

CLASS "B" LOAD FACTOR = 1.9

CLASS "C" LOAD FACTOR = 1.5

CLASS "C-1" LOAD FACTOR = 1.5

Bc = O.D. OF PIPE
D = I.D. OF PIPE

BEDDING DETAIL
NOT TO SCALE

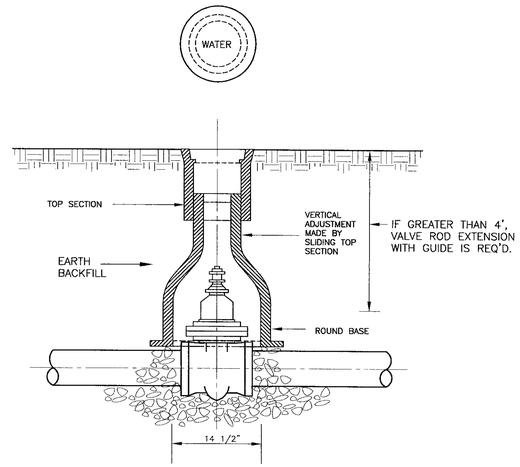

USE STANDARD DESIGNED VALVE BOX OF THE APPROPRIATE LENGTH (HEIGHT) UTILIZING APPROVED MANUFACTURERS OF VALVE BOX APPURTENANCES.

VALVE BOX DETAIL
NOT TO SCALE

NOTE: MINIMUM DISTANCE BETWEEN HYDRANT AND FACE OF CURB SHALL BE 24 INCHES. (WHERE APPLICABLE)

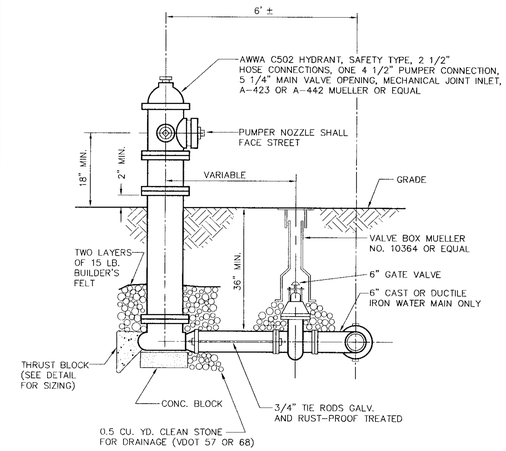

FIRE HYDRANT ASSEMBLY
NOT TO SCALE

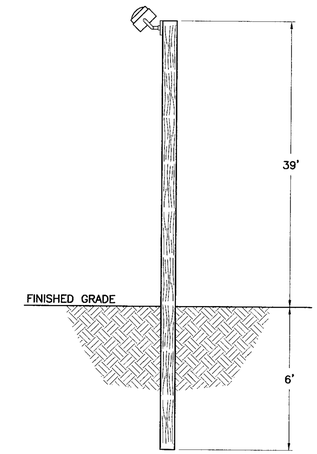

NOTE

MOUNT EXTERIOR LIGHT TO TREATED WOODEN 45 FT., CLASS 7 TELEPHONE POLE. TELEPHONE POLE TO BE BURIED AT A DEPTH OF 6 FT. BELOW GRADE AND EXTEND REMAINDER ABOVE GRADE. POLE LOCATION TO BE DETERMINED IN THE FIELD BY OWNER.

POLE MOUNTED EXTERIOR LIGHT DETAIL
NOT TO SCALE

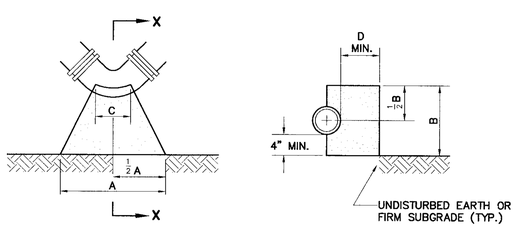

PLAN

SECTION X-X

NOTE: INSTALL TWO LAYERS OF 15 LB. BUILDER'S FELT OR TWO LAYERS OF 6 MIL. POLYETHYLENE BETWEEN CONCRETE AND FITTING.

PIPE DIA.	45° BEND					90° BEND				
	A	B	C	D	E	A	B	C	D	E
3"	9"	12"	6"	6"	4"	12"	12"	6"	12"	6"
4"	9"	12"	6"	6"	4"	16"	12"	6"	12"	6"
6"	12"	14"	6"	8"	4"	21"	14"	6"	18"	6"
8"	18"	16"	8"	9"	6"	30"	16"	8"	18"	9"
10"	24"	18"	8"	10"	6"	36"	24"	10"	18"	9"
12"	30"	20"	12"	12"	9"	48"	24"	12"	18"	12"
16"	42"	30"	12"	15"	9"	60"	30"	16"	21"	12"
20"	56"	30"	12"	16"	16"	72"	40"	20"	21"	24"
24"	60"	36"	12"	21"	24"	84"	48"	24"	24"	30"
30"	72"	48"	16"	27"	24"	108"	60"	30"	24"	36"

BASED ON NORMAL OPERATING PRESSURE UP TO 150 PSI

E = ADDITIONAL LENGTH TO BE ADDED TO DIMENSION A FOR EACH ADDITIONAL 50 PSI PRESSURE UP TO 300 PSI

THRUST BLOCK DETAILS
(45° - 90° BENDS)
NOT TO SCALE

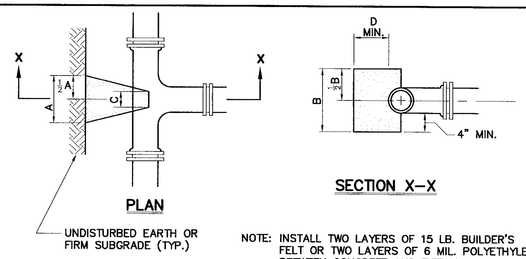

PLAN

SECTION X-X

NOTE: INSTALL TWO LAYERS OF 15 LB. BUILDER'S FELT OR TWO LAYERS OF 6 MIL. POLYETHYLENE BETWEEN CONCRETE AND FITTING.

TEE	BRANCH DIAMETER									
	3"	4"	6"	8"	10"	12"	16"	20"	24"	30"
A	12"	12"	16"	18"	26"	30"	40"	48"	60"	80"
B	12"	16"	20"	30"	32"	42"	56"	72"	80"	96"
C	8"	8"	12"	12"	12"	12"	16"	24"	24"	24"
D	6"	6"	8"	9"	10"	12"	14"	18"	20"	24"

BASED ON NORMAL OPERATING PRESSURE UP TO 150 PSI

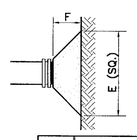

NOTE: INSTALL TWO LAYERS OF 15 LB. BUILDER'S FELT OR TWO LAYERS OF 6 MIL. POLYETHYLENE BETWEEN CONCRETE AND FITTING.

PLUG	PIPE DIAMETER									
	3"	4"	6"	8"	10"	12"	16"	20"	24"	30"
E	14"	16"	21"	29"	36"	41"	54"	64"	75"	88"
F	8"	8"	10"	10"	12"	14"	16"	18"	20"	24"

BASED ON NORMAL OPERATING PRESSURE UP TO 150 PSI

THRUST BLOCK DETAILS
(TEES, TAPPING SLEEVES, PLUGS & CAPS)
NOT TO SCALE

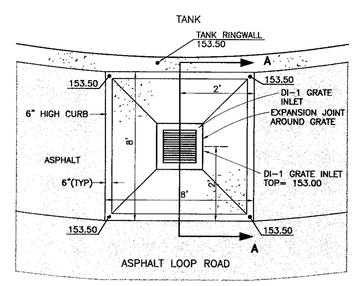

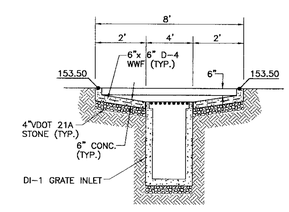

SECTION A-A

OVERFLOW SPLASH PAD & DROP INLET
NOT TO SCALE

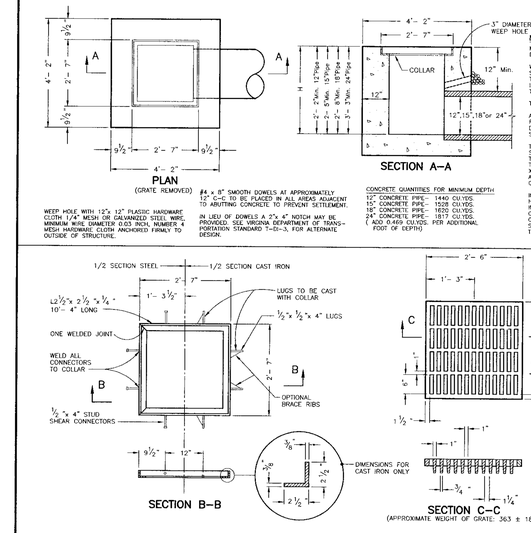

VDOT STANDARD DI-1
NOT TO SCALE

COMMONWEALTH OF VIRGINIA
MICHAEL S. HAGGERTY
No. 035201
6/5/06
PROFESSIONAL ENGINEER

Draper Aden Associates
Engineering • Surveying • Environmental Services
Blacksburg, VA
Charlottesville, VA
Hampton Roads, VA
Richmond, VA
8090 Villa Park Drive
Richmond, VA 23228
804-264-2228 Fax: 804-264-8773
www.daa.com

MISCELLANEOUS DETAILS
ROUTE 301/I-95 WATER STORAGE TANK
PRINCE GEORGE COUNTY, VIRGINIA

REVISIONS
02/20/06 COUNTY / VDH COMMENTS
05/05/06 COUNTY / VDH COMMENTS

DESIGNED BY: MSH
DRAWN BY: STAFF
CHECKED BY: JPK
SCALE: AS SHOWN
DATE: 11/04/05
PROJECT NUMBER: R05274-02F