SPHEROID TANK

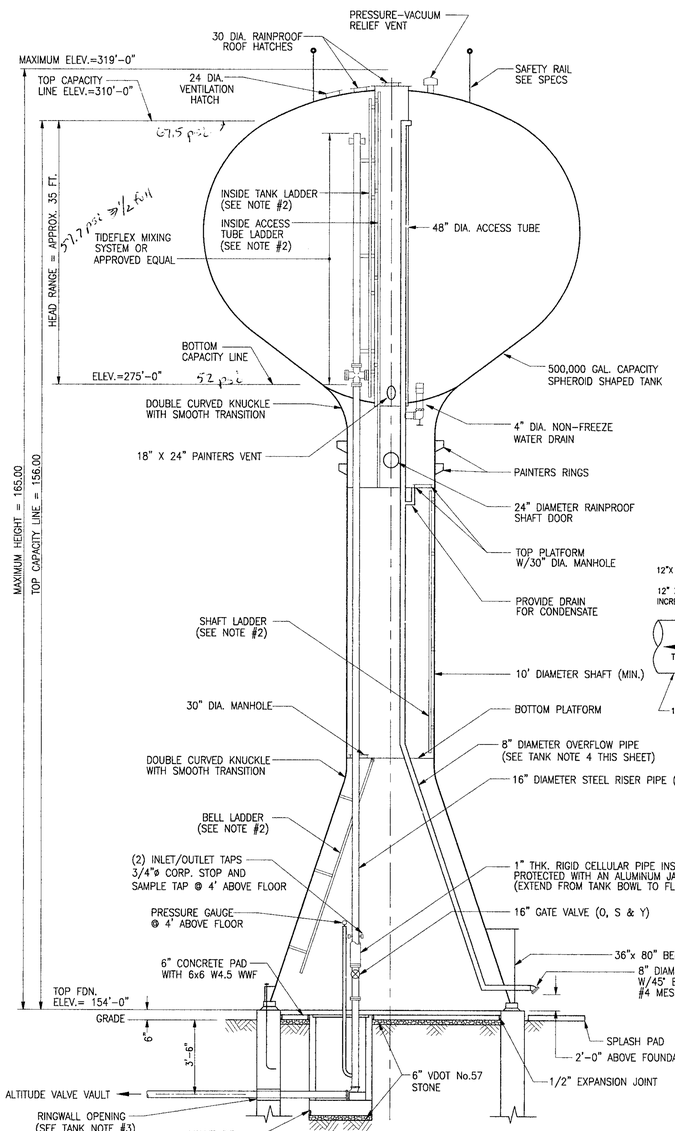

TANK ELEVATION
NOT TO SCALE

TANK NOTES

1. THE TANK FOUNDATION SHALL BE DESIGNED BY THE CONTRACTOR'S ENGINEER. DETAILED FOUNDATION PLANS FOR THE TANK SHALL BE SUBMITTED FOR APPROVAL TO THE ENGINEER. THE FOUNDATION SHALL BE DESIGNED BY A PROFESSIONAL ENGINEER REGISTERED IN THE STATE OF VIRGINIA.
2. LADDERS IN BELL, PEDESTAL, ACCESS TUBE, AND TANK SHALL BE EQUIPPED WITH RIGID-RAIL TYPE SAFETY CLIMB DEVICES MEETING OSHA REQUIREMENTS.
3. OPENING IN RINGWALL FOR THE WATER LINE SHALL BE A NOMINAL 1-INCH LARGER THAN FLANGE DIAMETER. THE ANNULAR SPACE AROUND PIPE SHALL NOT BE GROUTED OR CAULKED.
4. TANK CONTRACTOR TO ENSURE THAT OVERLOW PIPE WILL ACCOMMODATE A MAXIMUM OVERFLOW RATE OF 1500 GPM.

TANK LOGO NOTE

1. THE TANK SIGN SHALL SAY "YOU BELONG IN PRINCE GEORGE COUNTY." ON TWO SIDES OF THE TANK. THE COUNTY WILL PROVIDE THE SIGN SPECIFICATIONS IN THE BIDDING DOCUMENTS

ALTITUDE VALVE VAULT NOTES

1. THE ALTITUDE VALVE SHALL BE A 12 INCH CLA-VAL MODEL 210-16 ALTITUDE VALVE FOR TWO-WAY FLOW. THE VALVE SHALL BE A NON-THROTTLING, HYDRAULICALLY OPERATED AND PILOT CONTROLLED VALVE THAT REMAINS FULLY OPEN UNTIL THE SHUT OFF POINT IS REACHED. THE VALVE SHALL CLOSE AT A HIGH WATER LEVEL AND OPEN FOR RETURN FLOW WHEN THE PRESSURE AT THE VALVE INLET IS LESS THAN THE TANK PRESSURE.
2. ALL PIPE AND FITTINGS WITHIN THE CONTROL VALVE VAULT SHALL BE 250 LB. FLANGE. PIPE SHALL BE A MINIMUM CLASS 52 IN ACCORDANCE WITH ANSI A21.15 (AWWA C115). ALL FLANGES SHALL CONFORM TO CLASS 250, ANSI B16.1.
3. ALL VALVES SHALL BE SUPPORTED WITH CONCRETE PIPE SADDLE SUPPORTS AS SHOWN.
4. ALL PRE-CAST VAULT SECTIONS SHALL CONFORM TO ASTM C913.
5. THE FLOOR SLAB SHALL BE SLOPED 1/8" PER FOOT TO THE SUMP.
6. ALL JOINTS SHALL BE SEALED WITH A BUTYL RUBBER SEALANT.
7. THE BASE VAULT SECTION INCLUDING THE SUMP SHALL BE MONOLITHIC.

VALVE PIT NOTES

1. DETAILED STRUCTURAL PLANS FOR THE VALVE PIT SHALL BE SUBMITTED FOR APPROVAL TO THE ENGINEER. THE VALVE PIT SHALL BE STRUCTURALLY DESIGNED BY A PROFESSIONAL ENGINEER REGISTERED IN THE STATE OF VIRGINIA.
2. ALL PIPING INSIDE THE VALVE PIT SHALL BE 125 LB. FLANGE. OPENING IN VALVE PIT WALL SHALL BE A NOMINAL 1-INCH LARGER THAN FLANGE DIAMETER. PROVIDE LINK-SEAL WALL SLEEVE AND SEAL (OR EQUAL) FOR A WATERTIGHT WALL PENETRATION.

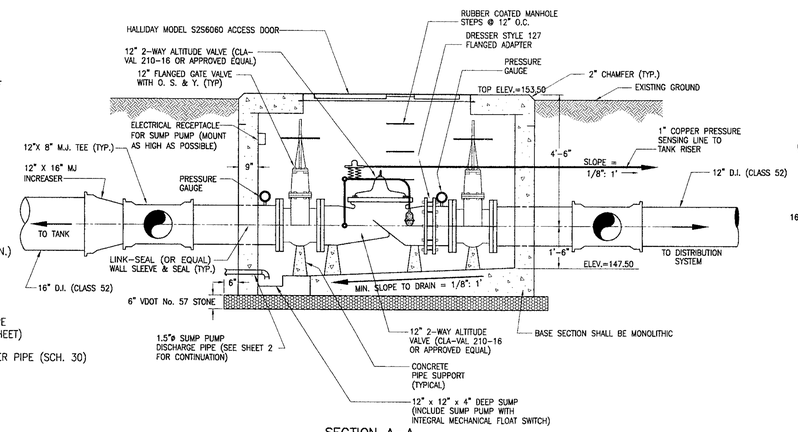

SECTION A-A

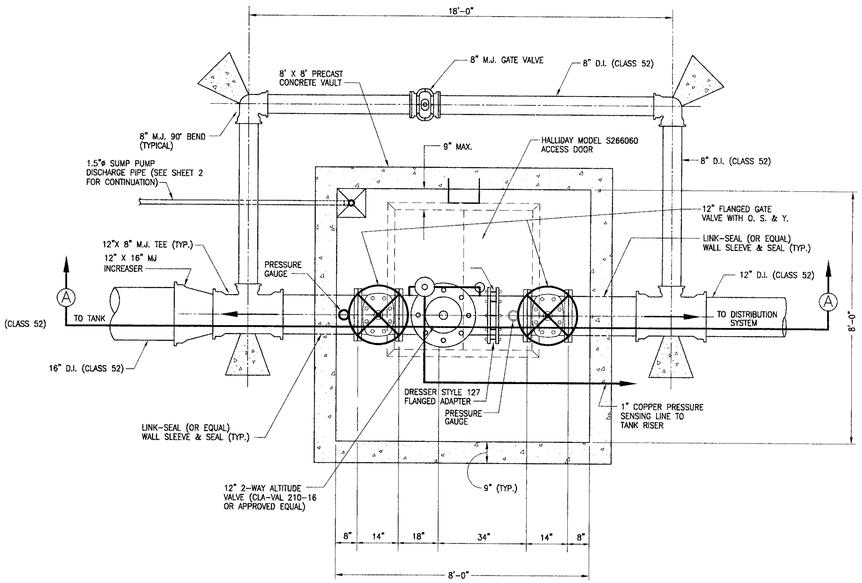

PLAN VIEW

ALTITUDE VALVE VAULT DETAIL
NOT TO SCALE

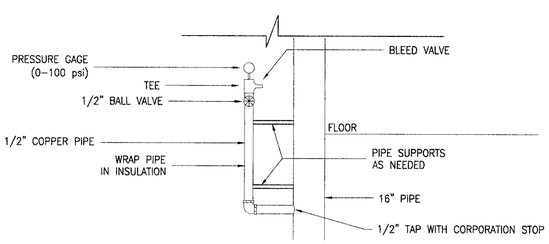

PRESSURE GAGE
NOT TO SCALE

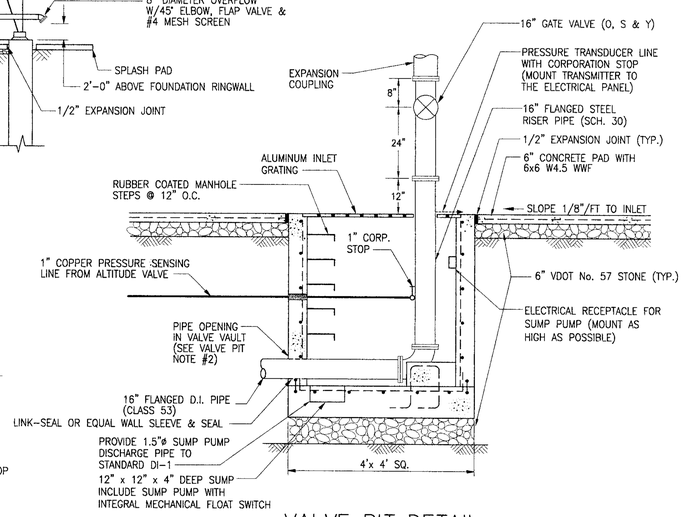

VALVE PIT DETAIL
NOT TO SCALE

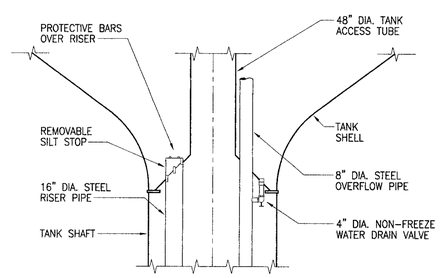

TANK DRAIN AND REMOVABLE SILT STOP

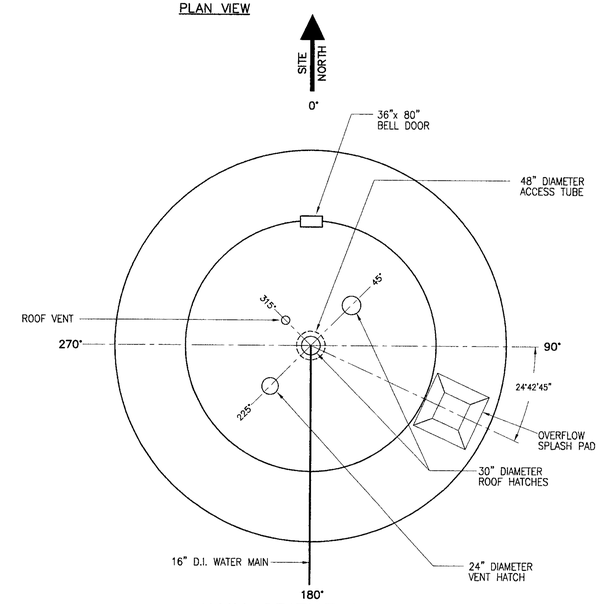

TANK ORIENTATION PLAN
NOT TO SCALE

COMMONWEALTH OF VIRGINIA
MICHAEL S. HAGGERTY
No. 035201
6/5/06
PROFESSIONAL ENGINEER

Draper Aden Associates
Engineering • Surveying • Environmental Services
Blacksburg, VA
Charlottesville, VA
Hampton Roads, VA
Richmond, VA
8090 Villa Park Drive
Richmond, VA 23228
804-264-2228 Fax: 804-264-3773
www.daa.com

TANK DETAILS
ROUTE 301/I-95 WATER STORAGE TANK
PRINCE GEORGE COUNTY, VIRGINIA

REVISIONS
02/20/06 COUNTY / VDH COMMENTS
06/05/06 COUNTY / VDH COMMENTS

DESIGNED BY:	MSH
DRAWN BY:	STAFF
CHECKED BY:	JPK
SCALE:	AS NOTED
DATE:	11/04/05
PROJECT NUMBER:	R05274-02F

3