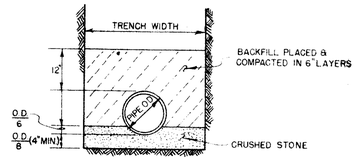

STANDARD TRENCH
SEWERS
(CLASS C)

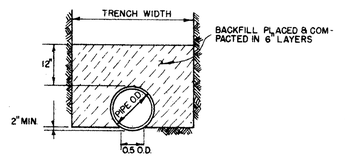

STANDARD TRENCH
WATER & FORCE MAINS
(CLASS C)
(LAYING CONDITION B)

STANDARD PIPE BEDDING

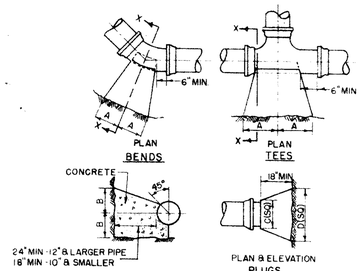

BENDS & TEES

SIZE	1/4 BENDS		1/8 BENDS		1/16 BENDS		TEES		PLUGS	
	A	B	A	B	A	B	A	B	C	D
6"	20"	12"	11"	12"	7"	10"	12"	15"	10"	27"
8"	27"	16"	15"	16"	10"	12"	16"	19"	12"	35"
10"	30"	22"	18"	21"	12"	16"	20"	24"	14"	44"
12"	35"	28"	20"	26"	14"	19"	23"	30"	16"	52"
14"	43"	31"	24"	30"	16"	24"	28"	33"	18"	61"
16"	48"	36"	27"	35"	17"	28"	32"	38"	20"	70"

NOTE

BASED ON 150 P.S.I STATIC PRESSURE PLUS A.W.W.A WATER HAMMER. ALL BEARING SURFACES TO BE CARRIED TO UNDISTURBED GROUND.
THRUST BLOCKS SHALL BE CONCRETE.

THRUST BLOCKS

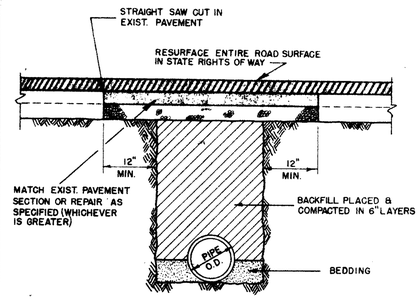

TYPICAL SECTION
NO SCALE

PAVEMENT REPAIR

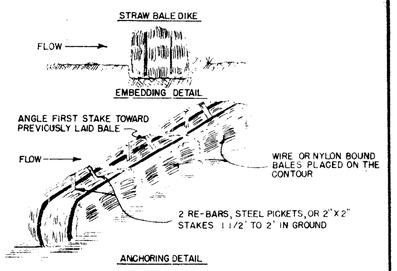

CONSTRUCTION SPECIFICATIONS

(1) BALES SHALL BE PLACED IN A ROW WITH ENDS TIGHTLY ABUTTING THE ADJACENT BALES.
(2) EACH BALE SHALL BE EMBEDDED IN THE SOIL A MINIMUM OF 4"
(3) BALES SHALL BE SECURELY ANCHORED IN PLACE BY STAKES OR RE-BARS DRIVEN THROUGH THE BALES. THE FIRST STAKE IN EACH BALE SHALL BE ANGLED TOWARD PREVIOUSLY LAID BALE TO FORCE BALES TOGETHER.
(4) INSPECTION SHALL BE FREQUENT AND REPAIR OR REPLACEMENT SHALL BE MADE PROMPLY AS NEEDED.
(5) BALES SHALL BE REMOVED WHEN THEY HAVE SERVED THIER USEFULNESS
(6) OTHER EROSION CONTROL MEASURES SHALL CONFORM TO THE REQUIREMENTS OF THE VA SEDIMENT & EROSION CONTROL HANDBOOK.

EROSION CONTROL--STRAW BALE DAM

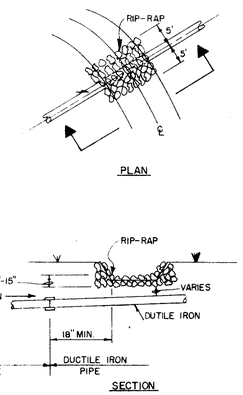

NOTES:
1. DUCTILE IRON PIPE SHALL EXTEND A MIN. OF 18 FEET BEYOND MAIN CHANNEL OF STREAM.
2. RIP-RAP SHALL BE VDH&T ST'D EC-1 TYPE "A"

RIP-RAP FOR STREAM CROSSINGS

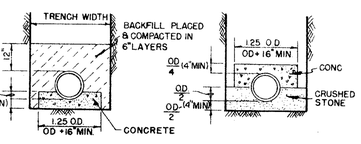

CONCRETE CRADLE
(CLASS A)

CONCRETE CAP
(CLASS A-1)

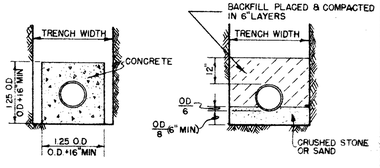

CONCRETE ENCASEMENT
(CLASS A-2)

TRENCHES IN ROCK

SPECIAL PIPE BEDDING

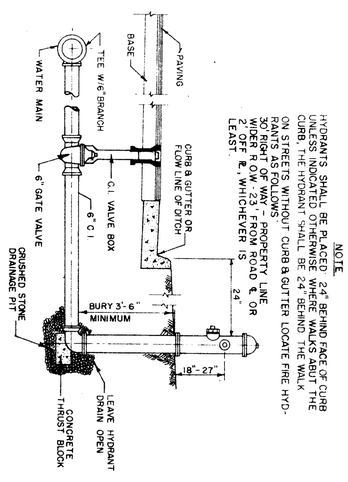

NOTE
HYDRANTS SHALL BE PLACED 24" BEHIND FACE OF CURB UNLESS OTHERWISE DIRECTED. WHEN THE ABUTTING CURB IS THE HYDRANT SHALL BE 24" BEHIND THE WALK.
ON STREETS WITHOUT CURB & GUTTER LOCATE FIRE HYDRANTS AS FOLLOWS:
30' RIGHT OF WAY - PROPERTY LINE
WIDER R.O.W.-23' FROM ROAD ℄ OR 2' OUT FROM PROPERTY LINE, WHICHEVER IS GREATER.

FIRE HYDRANT SETTING

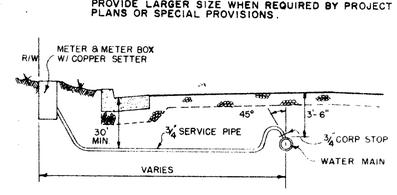

CURB & GUTTER STREETS

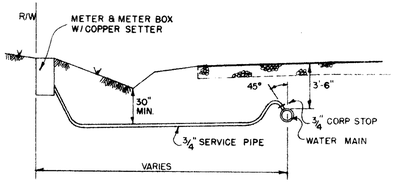

ROADSIDE DITCH

NOTE
METER BOXES SHALL BE LOCATED BEYOND THE RIGHT-OF-WAY LINE WHEN REQUIREDTO PLACE BOXES ON RELATIVELY FLAT SLOPES (NO STEEPER THAN 4:1)

WATER SERVICE CONNECTIONS

NOTE
THREE-QUARTER INCH SERVICE PIPE IS MINIMUM. PROVIDE LARGER SIZE WHEN REQUIRED BY PROJECT PLANS OR SPECIAL PROVISIONS.

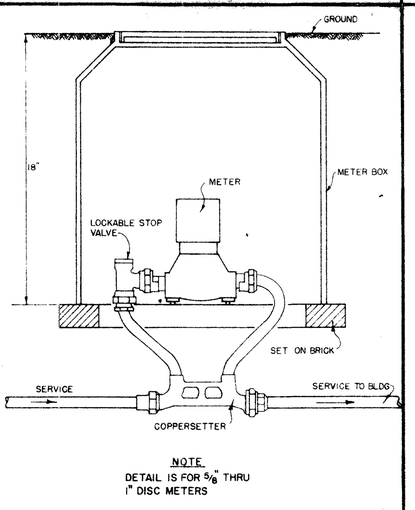

NOTE
DETAIL IS FOR 5/8" THRU 1" DISC METERS

METER SETTING

Specifications

1. Placement of all individual water meters shall be at the direction of the County Engineer.
2. Contractor shall be responsible for all construction stakeout within the limits of these plans.
3. All shrubs in lawn and "kept" areas within the highway right-of-way and within five feet of the pipe centerline shall be carefully removed as specified and replaced outside the five foot area.
4. Backfill material for open-cut across Birchett Drive shall be select material, Type II, compacted to 95% of theoretical maximum density at ± 20% of optimum moisture content.
5. Pavement patch and overlay shall be Virginia Department of Highways and Transportation grade S-5 bituminous concrete.
6. All meter vault pipe 3" and larger shall be ductile iron threaded flange conforming to AWWA Specifications C150-71, thickness Class 2 with 250 p.s.i. ANSI standard flanges.
7. All meter vault fittings 3" and larger shall be ductile iron flanged conforming to AWWA Specifications C110-71, with 250 p.s.i. ANSI standard flanges.
8. Water meters and strainers are to be provided by Virginia American Water Co.
9. Backflow preventer shall be a 6" Clayton - Model D, double check valve assembly or equal producing a minimum 5 p.s.i. headloss at 1000 g.p.m. flow.
10. Backpressure valve shall be a 4" Clayton - Series 506-01 or equal with a rated maximum normal flow rate not less than 800 g.p.m. and a rated maximum intermittent flow rate not less than 1800 g.p.m.
11. All meter vault pipe less than 3" shall be galvanized steel schedule 80 welded and seamless threaded pipe.

APPROVED	Rt. 156 Waterline Extension
COMMONWEALTH OF VIRGINIA — WALTER M. ALTMAN III — LICENSE NO 11039 — PROFESSIONAL ENGINEER	WATERLINE DETAILS
	COUNTY OF PRINCE GEORGE, VIRGINIA — UTILITY SYSTEM IMPROVEMENTS
	Legat Elrod and Associates, Inc.
DATE 1/24/81 — SCALE As Shown — DESIGNED — DRAWN — CHECKED	REVISIONS — DRAWING NO. OF 5 of 6