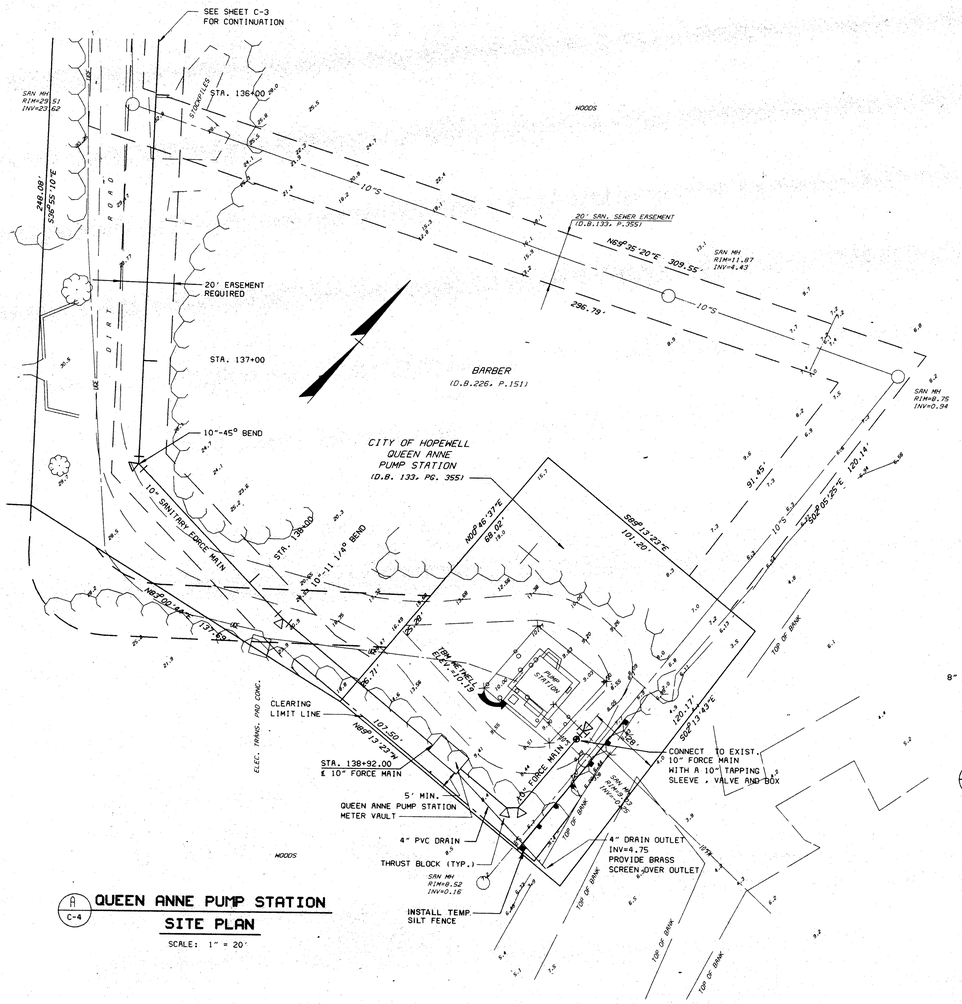

A C-4 **QUEEN ANNE PUMP STATION SITE PLAN**

SCALE: 1" = 20'

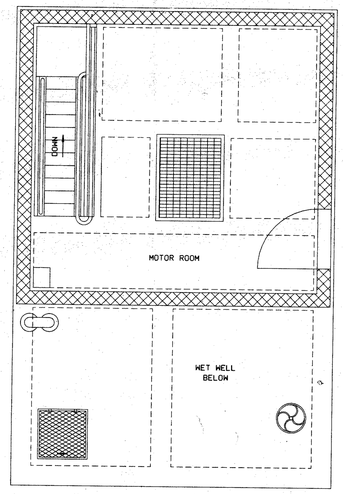

N **MOTOR ROOM PLAN**

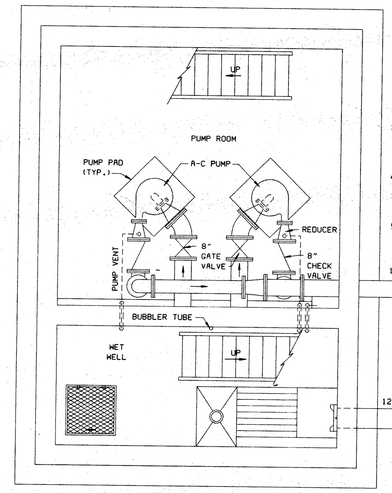

N **PUMP ROOM & WET WELL PLAN**

QUEEN ANNE PUMP STATION

SCALE: 3/8" = 1'-0"

NOTES:

1. EXISTING ALLIS-CHALMERS PUMPS (4X4X12 L.C. NSW), 2 EACH, SHALL BE MODIFIED BY REPLACING THE EXISTING IMPELLER WITH A NEW 10 1/8 INCH IMPELLER TO PROVIDE A NEW OPERATING CONDITION OF 200 GPM @ 105FT.
2. RESET WET WELL LEVELS AS FOLLOWS:
   ALARM LEVEL SENSOR @ ELEV. 1.00
   LAG PUMP ON LEVEL SENSOR @ ELEV. 0.50
   LEAD PUMP ON LEVEL SENSOR @ ELEV. 0.00
   PUMP OFF LEVEL SENSOR @ ELEV. -2.25
3. PUMP IMPELLER REPLACEMENT SHALL BE ACCOMPLISHED AT LOW FLOW PERIODS (MIDNIGHT TO 6:00 AM). CONTRACTOR SHALL PROVIDE ALL REQUIRED EQUIPMENT (GENERATORS, PORTABLE PUMPS, PIPING, ETC.) NECESSARY TO MAINTAIN THE EXISTING STATION IN OPERATION DURING IMPELLER REPLACEMENT.
4. THE IMPELLER REPLACEMENT CANNOT BE ACCOMPLISHED UNTIL THE NEW FORCE MAIN CONSTRUCTION FROM F.C.I. TO QUEEN ANNE PUMP STATION IS COMPLETED, TESTED AND ACCEPTED BY THE OWNER, AND F.C.I. IS PREPARED TO PUMP THEIR SEWAGE THRU THE FORCE MAIN, BYPASSING THE QUEEN ANNE PUMP STATION.
5. ALL PUMP STATION WORK SHALL BE COORDINATED WITH CITY OF HOPEWELL UTILITY PERSONNEL.

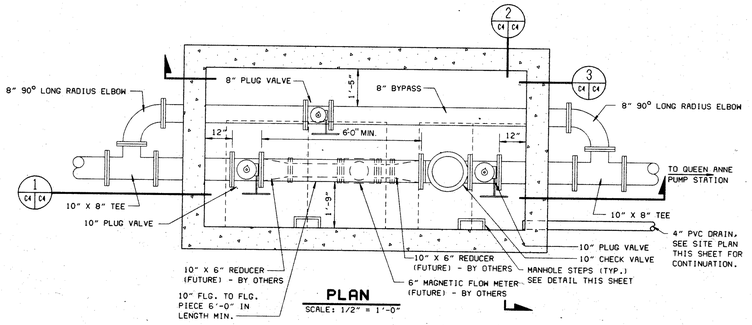

PLAN

SCALE: 1/2" = 1'-0"

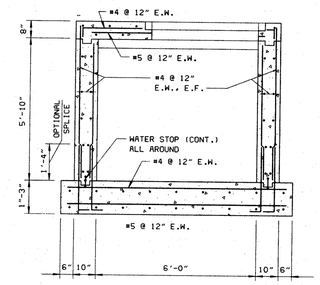

SECTION

SCALE: 1/2" = 1'-0"

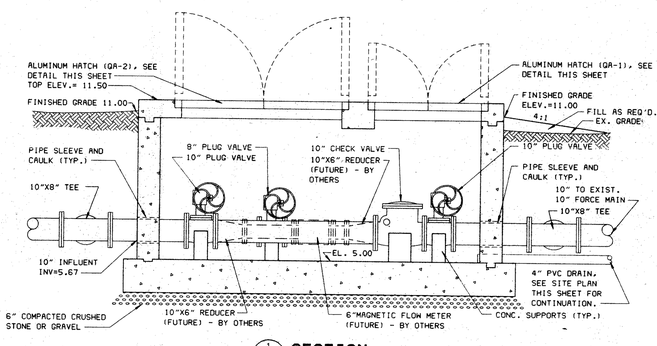

SECTION

SCALE: 1/2" = 1'-0"

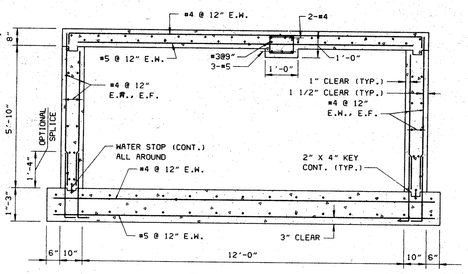

SECTION

SCALE: 1/2" = 1'-0"

QUEEN ANNE PUMP STATION METER VAULT DETAIL

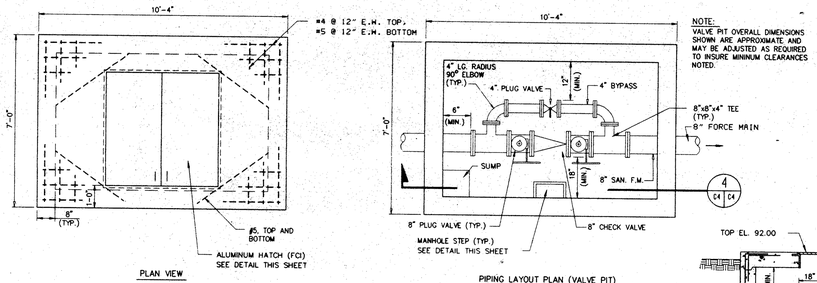

NOTE: VALVE PIT OVERALL DIMENSIONS SHOWN ARE APPROXIMATE AND MAY BE ADJUSTED AS REQUIRED TO INSURE MINIMUM CLEARANCES NOTED.

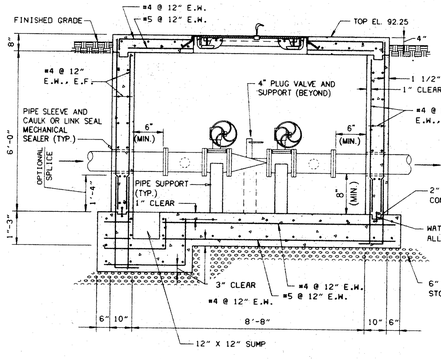

DETAIL - VALVE PIT AT FEDERAL CORRECTIONAL INSTITUTION (FCI)

NOT TO SCALE

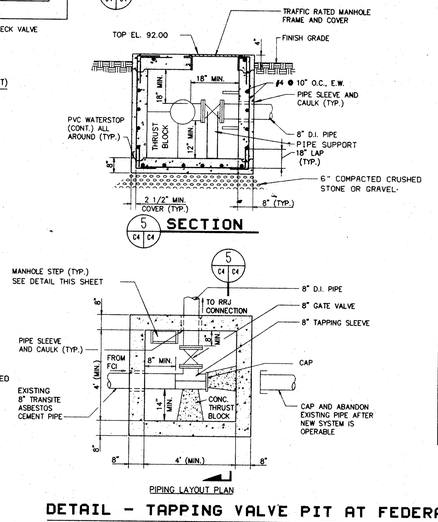

DETAIL - TAPPING VALVE PIT AT FEDERAL CORRECTIONAL INSTITUTION (FCI)

NOT TO SCALE

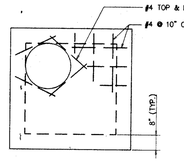

VALVE PIT COVER

NOTE

HATCH SHALL BE A STANDARD MANUFACTURER'S DESIGN CONSTRUCTED OF ALUMINUM CHECKERED PLATE FOR A MINIMUM LIVE LOAD OF 300 PSF. DOORS SHALL BE DOUBLE LEAF AND EQUIPPED WITH TORSION BAR SPRINGS TO HOLD THEM OPEN WHILE WORK IS BEING PERFORMED. OUTSIDE ENTRANCE SHALL BE OBTAINED WITH A REMOVABLE KEY WRENCH. A SPOON HANDLE SHALL BE PROVIDED INSIDE THE ACCESS DOORS TO PERMIT OPENING FROM THE INSIDE.

HATCH SCHEDULE

	FCI	QA-1	QA-2
"A"	4'-0"	4'-0"	4'-0"
"B"	4'-0"	4'-0"	6'-0"

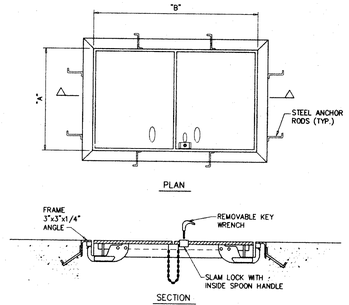

DETAIL - ALUMINUM HATCH - DOUBLE LEAF

NOT TO SCALE

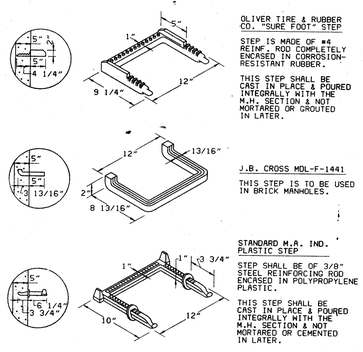

MANHOLE STEP SPECIFICATIONS

NOT TO SCALE

1/2" = 1'-0" 12" 0 1' 2' 3' 4' 5'

1" = 20' 20' 10' 0 20' 40'

Owner:

RIVERSIDE REGIONAL JAIL AUTHORITY

Project:

RIVERSIDE REGIONAL JAIL

PRINCE GEORGE COUNTY, VIRGINIA

Notes:

Mark:	Date:	Description:

REVISIONS

Key Plan:

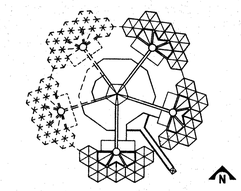

Architects / Engineers:

VOSBECK
DMJM
INCORPORATED

Architecture Planning Engineering
Suite 800, 1900 M Street, N.W., Washington, D.C. 20036

COMMONWEALTH OF VIRGINIA
GEORGE I. WILSON, JR.
No. 9707
PROFESSIONAL ENGINEER

Consultants:

I.V. Harris and Assoc. Inc.	Associated Architects
Correctional Services Group	Program Verif, Operations
MMM Design Group	Civil Engineering
Systech Group, Inc.	Security
Foodesign Assoc. Inc.	Food Service
Leonard Smith and Assoc. Inc.	Cost Estimating
Polysonics	Acoustical Consultant

Drawing Title:

FORCE MAIN SITE PLAN AND DETAILS

DMJM Project No. 3053

Scale: AS SHOWN	Date: JULY 19, 1994	Drawing No. C-4
Drawn By: SAT	Approved By: SLC	