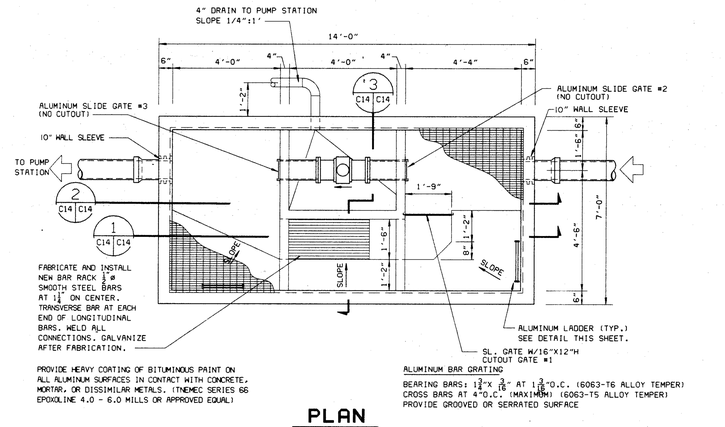

PROVIDE HEAVY COATING OF BITUMINOUS PAINT ON ALL ALUMINUM SURFACES IN CONTACT WITH CONCRETE, MORTAR, OR DISSIMILAR METALS. (TNEMEC SERIES 66 EPOXOLINE 4.0 - 6.0 MILLS OR APPROVED EQUAL)

ALUMINUM BAR GRATING

BEARING BARS: 1 3/4"X 3/16" AT 1 3/16"O.C. (6063-T6 ALLOY TEMPER)
CROSS BARS AT 4"O.C. (MAXIMUM) (6063-T5 ALLOY TEMPER)
PROVIDE GROOVED OR SERRATED SURFACE

PLAN

SCALE: 1/2" = 1'-0"

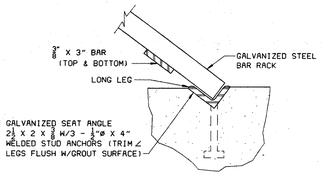

DETAIL 5

NOT TO SCALE

NOTE:
GUIDE FRAME MAY BE WALL MOUNTED OR EMBEDDED. ANCHOR BOLTS SHALL BE STAINLESS STEEL AND FURNISHED BY FRAME MANUFACTURER.

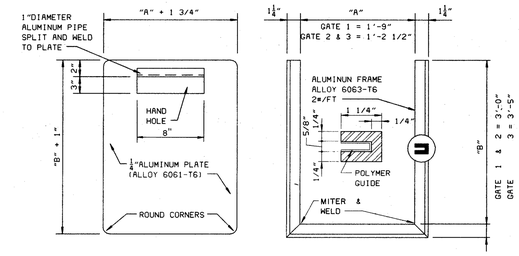

ALUMINUM SLIDE GATE AND FRAME DETAIL

SHREDDER CAPACITY

MIN.	100	GPM
AVG.	200	GPM
MAX.	500	GPM

HL SHALL NOT EXCEED 5PSI

NOTE:
PROVIDE RAKE WITH 8 FOOT LONG HANDLE TO MANUALLY CLEAN BAR RACK.

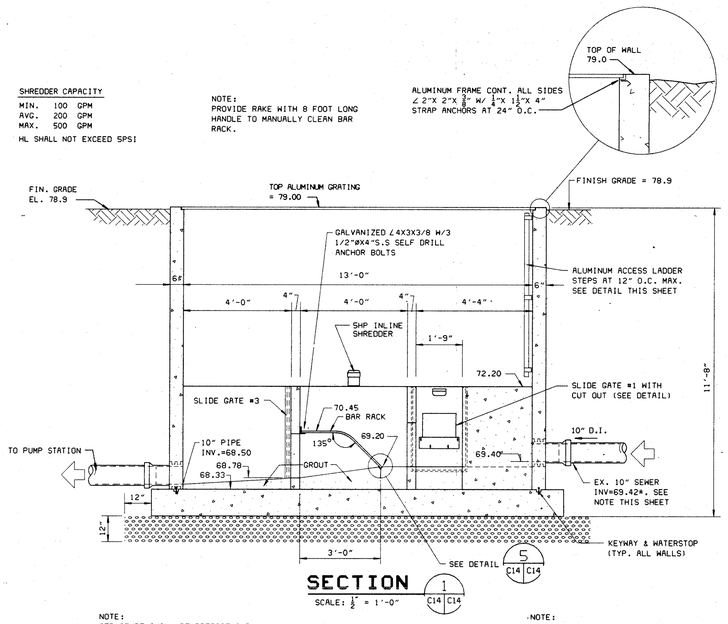

SECTION 1

SCALE: 1/2" = 1'-0"

NOTE:
STRUCTURE SHALL BE PRECAST AND REINFORCED IN ACCORDANCE WITH ASTM C850 AND C913.

NOTE:
CONTRACTOR SHALL VERIFY LOCATION AND INVERT OF EXISTING SEWER AND FORCE MAIN PIPES PRIOR TO CONSTRUCTION OF SHREDDER OR PUMP STATION.

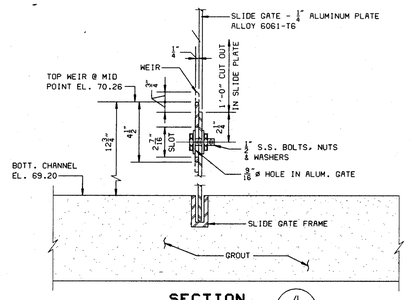

SECTION 4

SCALE: 1 1/2" = 1'-0"

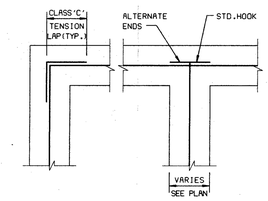

REINFORCING DETAIL AT CORNERS

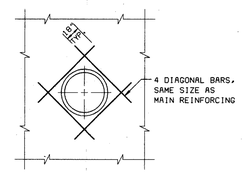

TYPICAL ARRANGEMENT REINFORCING WHERE SLEEVES PASS THRU WALLS

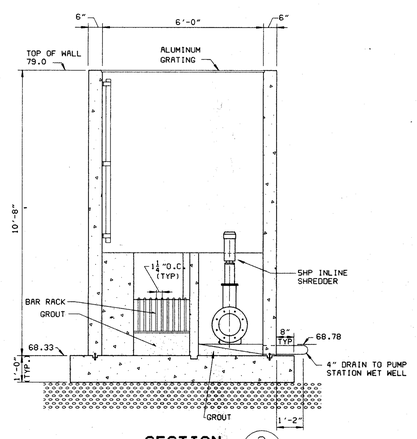

SECTION 3

SCALE: 1/2" = 1'-0"

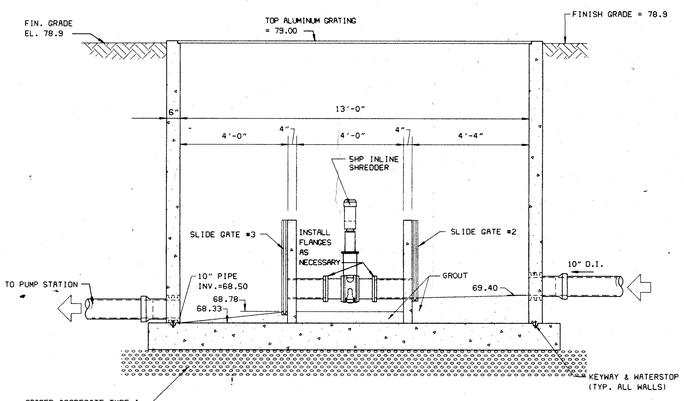

SECTION 2

SCALE: 1/2" = 1'-0"

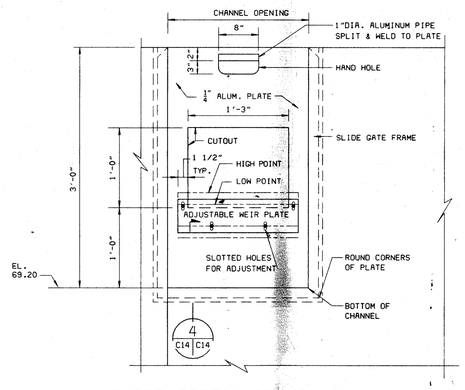

SLIDE GATE 1 DETAIL

SCALE: 1 1/2" = 1'-0"

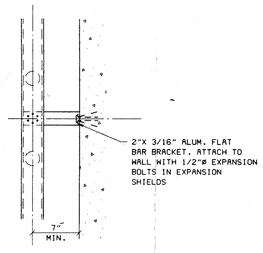

SECTION 5

SCALE: 1 1/2" = 1'-0"

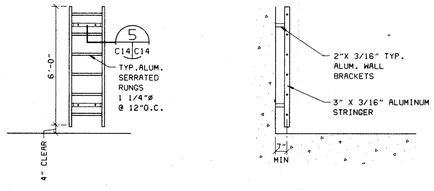

LADDER DETAIL

SCALE: 3/8" = 1'-0"

Owner:

RIVERSIDE REGIONAL JAIL AUTHORITY

Project:

RIVERSIDE REGIONAL JAIL

PRINCE GEORGE COUNTY, VIRGINIA

Notes:

Mark:	Date:	Description:

REVISIONS

Key Plan:

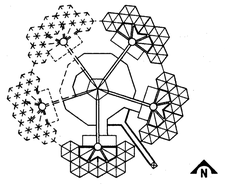

Architects / Engineers:

VOSBECK
DMJM
INCORPORATED

Architecture Planning Engineering
Suite 800, 1900 M Street, N.W., Washington, D.C. 20036

COMMONWEALTH OF VIRGINIA
GEORGE I. WILSON, JR.
No. 9707
PROFESSIONAL ENGINEER

Consultants:

I.V. Harris and Assoc. Inc.	Associated Architects
Correctional Services Group	Program Verif, Operations
M&M Design Group	Civil Engineering
Systech Group, Inc.	Security
Foodesign Assoc. Inc.	Food Service
Leonard Smith and Assoc. Inc.	Cost Estimating
Polysonics	Acoustical Consultant

Drawing Title:

INLINE SHREDDER

DMJM Project No. 3053

Scale: AS SHOWN	Date: JULY 19, 1994	Drawing No. C-14
Drawn By: CADD/SAT	Approved By: SLC	