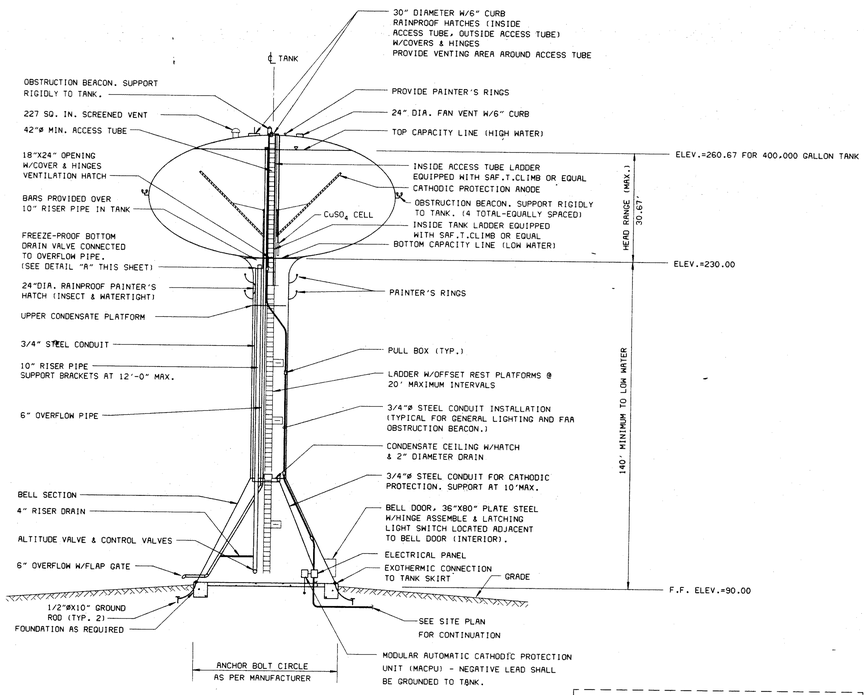

TYPICAL PEDESTAL SPHEROID ELEVATED WATER TANK
400,000 GALLON CAPACITY

NOT TO SCALE

TANK NOTES:

1. ALL WORK ON ELEVATED TANK, PIPING, AND APPURTENANCES SHALL BE IN ACCORDANCE WITH N.F.P.A. 22.
2. ACTUAL DIAMETER OF FOUNDATION RING WILL DEPEND ON MANUFACTURERS DESIGN & FOUNDATION REQUIREMENT. LAYOUT INSIDE OF CONE SHALL BE RELATIVE TO WHAT IS SHOWN ON THIS SHEET. ACTUAL LAYOUT SHALL BE SHOWN ON SHOP DRAWINGS.
3. ALTITUDE VALVE OPERATION:
   A. VALVE SHALL BE ADJUSTED TO CLOSE AT THE HIGH WATER ELEVATION IN THE TANK TO PREVENT OVERFLOW.
   B. VALVE SHALL BE ADJUSTED TO OPEN WHEN THE DISTRIBUTION SYSTEM PRESSURE DROPS 1 PSI BELOW VALVE SHUT-OFF PRESSURE.
4. MOUNTING PLATES SHALL BE INSTALLED IN THE BELL SECTION AND SHALL BE SIZED TO ACCOMMODATE THE ELECTRICAL PANELS, THE WATER SYSTEM CONTROL PANEL, THE CATHODIC PROTECTION PANEL AND THE LEVEL RECORDER.
5. PROVIDE INTERIOR LIGHTING FOR WATER TANK AS FOLLOWS:
   A. INSTALL FOUR VAPOR PROOF TYPE "P1" 150 WATT INCANDESCENT FIXTURES WITH WIRE GUARD IN THE BASE CONE AREA OF THE SUPPORT STRUCTURE, CONTROLLED BY A SINGLE WEATHERPROOF SWITCH.
   B. INSTALL SINGLE LIGHTS OF THE SAME TYPE AS INDICATED IN (A.) AT EACH CONDENSATE AND REST PLATFORM AND AT THE TOP OF THE ACCESS TUBE. THESE UPPER LIGHTS SHALL BE CONTROLLED BY A SECOND WEATHERPROOF SWITCH LOCATED 2'-0" BENEATH THE LOWEST CONDENSATE PLATFORM. SEE SECTION 13001 FOR FIXTURE TYPE.

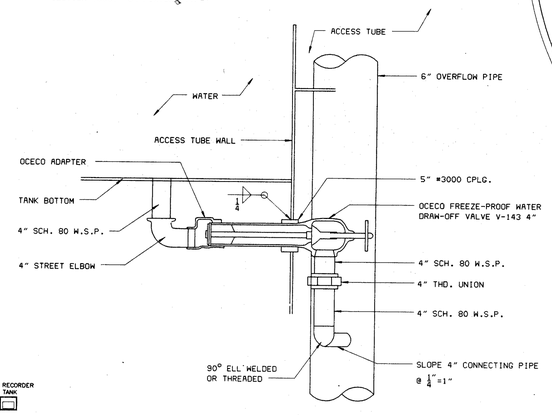

DETAIL "A"
TANK BOTTOM CLEANOUT
N.T.S.

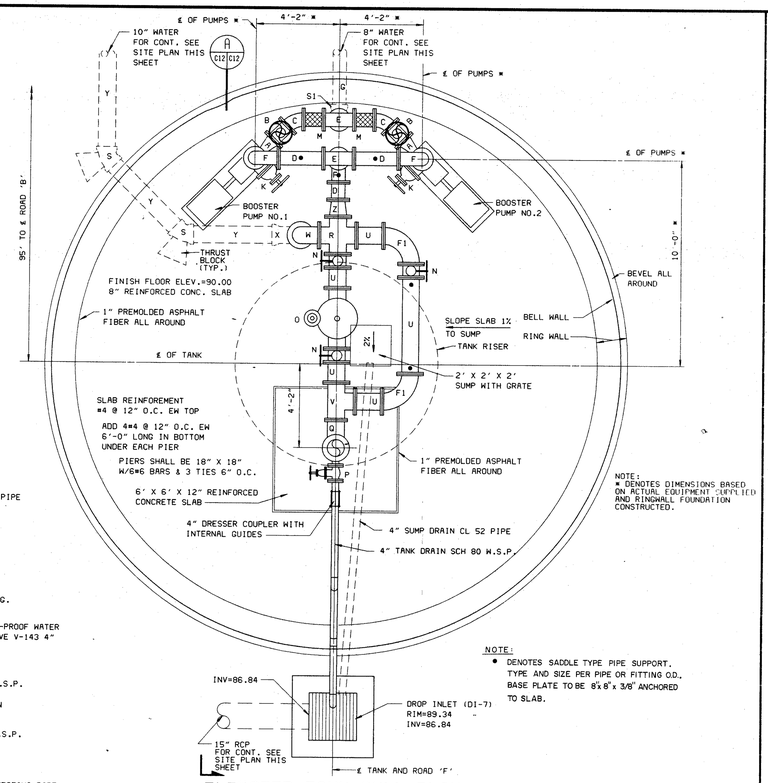

NOTE:
* DENOTES DIMENSIONS BASED ON ACTUAL EQUIPMENT SUPPLIED AND RINGWALL FOUNDATION CONSTRUCTED.

NOTE:
● DENOTES SADDLE TYPE PIPE SUPPORT. TYPE AND SIZE PER PIPE OR FITTING O.D., BASE PLATE TO BE 8"x8"x 3/8" ANCHORED TO SLAB.

ELEVATED TANK BELL PLAN
SCALE: 3/8" = 1'-0"

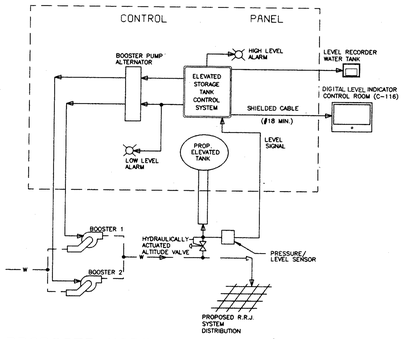

PROPOSED WATER CONTROL SYSTEM
BLOCK DIAGRAM
NOT TO SCALE

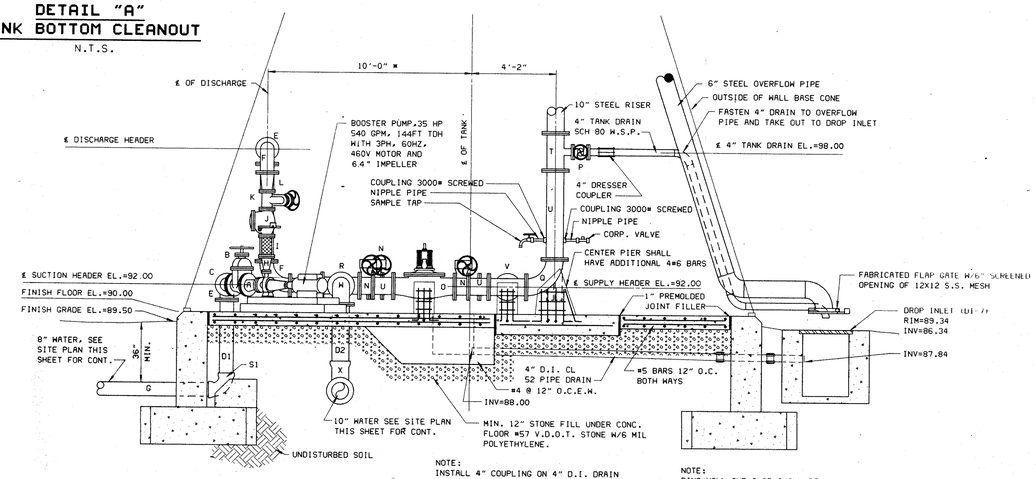

NOTE:
INSTALL 4" COUPLING ON 4" D.I. DRAIN ONE EACH SIDE OF FOUNDATION RING

NOTE:
RING WALL AND SLAB SHALL BE SIZED BY TANK MANUFACTURER.

(A) SECTION
(C12/C12) SCALE: 3/8" = 1'-0"

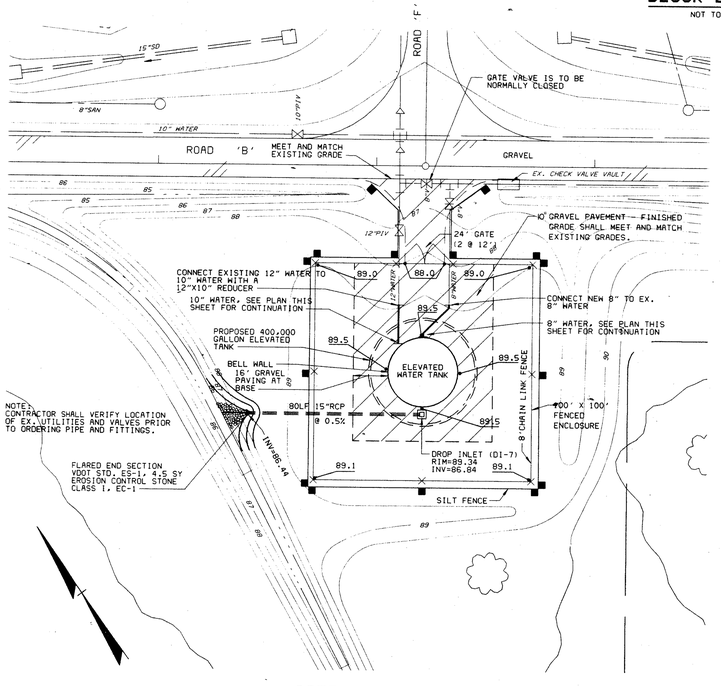

SITE PLAN
SCALE: 1"=25'

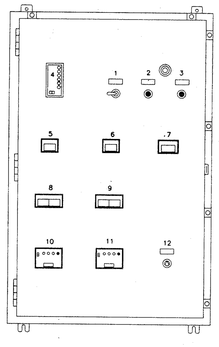

NEMA 12 ENCLOSURE

APPROXIMATELY 48" HIGH, 36" WIDE, 12" DEEP

L E G E N D

1. PANEL CONTROL (ON/OFF)
2. ALARM LIGHT RESET
3. ALARM SILENCE
4. ANNUNCIATOR
   A. ELEVATED TANK HIGH LEVEL
   B. ELEVATED TANK LOW LEVEL
   C. BOOSTER PUMP NO.1 FAIL
   D. BOOSTER PUMP NO.2 FAIL
5. ELEVATED TANK – HIGH LEVEL
6. ELEVATED TANK – LOW LEVEL
7. ELEVATED TANK – LEVEL IN FEET
8. BOOSTER PUMP LEAD CONTROL
9. BOOSTER PUMP LAG CONTROL
10. BOOSTER PUMP 1 CONTROL MODULE
11. BOOSTER PUMP 2 CONTROL MODULE
12. AUTO BOOSTER PUMPS SEQUENCE

WATER SYSTEM CONTROL PANEL

L E G E N D

A. AUDIBLE ALARM HORN
B. ALARM ANNUNCIATOR
C. ELEVATED TANK LEVEL 0-40 FEET, DIGITAL INDICATOR
D. CONTROL POWER CIRCUIT BREAKER

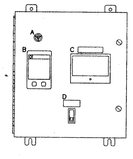

NEMA 12 ENCLOSURE

APPROXIMATELY 16" HIGH, 14" WIDE, 8" DEEP

MONITORING PANEL, CONTROL ROOM (C-116)

PROPOSED ENCLOSURE DOOR LAYOUTS
NOT TO SCALE

PIPE SCHEDULE

NO.	SIZE	DESCRIPTION
A	8"X4"	FLG. ECCENTRIC REDUCER D.I.
B	8"	FLG. GATE VALVE IN.R.S.) D.I. W/ PIPE SUPPORT
C	8"	FLG. 45° ELBOW D.I.
D	8"	FLG. TO FLG. SPOOL PIECE D.I.
D1	8"	FLG. TO P.E. PIECE D.I.
D2	10"	FLG. TO P.E. PIECE D.I.
E	8"	FLG. TEE D.I.
F	8"	FLG. 90° ELBOW LONG RADIUS D.I.
F1	10"	FLG. 90° ELBOW LONG RADIUS D.I.
G	8"	MECH. JT. TO P.E. PIECE D.I.
H	6"X3"	FLG. CONCENTRIC REDUCER D.I.
I	6"	FLG. FLEXIBLE CONNECTION
J	6"	FLG. SWING CHECK VALVE D.I.
K	6"	FLG. GATE VALVE IN.R.S.) D.I.
L	8"X6"	FLG. CONCENTRIC REDUCER D.I.
M	8"	FLG. FLEXIBLE CONNECTION D.I.
N	10"	FLG. BUTTERFLY VALVE W/HANDWHEEL (OP. LEFT)
O	10"	FLG. ALTITUDE VALVE D.I.
P	4"	FLG. GATE VALVE IN.R.S.) D.I.
Q	10"	FLG. 90° BASE ELBOW LONG RADIUS D.I.
R	10"	FLG. CROSS TEE D.I. W/ CONCRETE SUPPORT
S	10"	MECH. JT. 45° ELBOW D.I.
S1	8"	MECH. JT. 90° ELBOW SHORT RADIUS D.I.
T	10"X4"	FLG. TEE D.I.
U	10"	FLG. TO FLG. SPOOL PIECE D.I.
V	10"	FLG. TEE D.I.
W	10"	FLG. 90° ELBOW SHORT RADIUS D.I.
X	10"	MECH. JT. TO MECH. JT. 90° ELBOW LONG RADIUS D.I.
Y	10"	P.E. TO P.E. SPOOL PIECE D.I.
Z	10"X8"	FLG. CONCENTRIC REDUCER D.I.

NOTES:
● ALL GASKETS ARE 1/8" THICK FULL FACED. DIMENSIONS SHALL NOT BE SCALED. USE TABLE LENGTH ONLY. IT SHALL BE THE CONTRACTOR RESPONSIBILITY TO CHECK THESE DIMENSIONS BASED ON ACTUAL EQUIPMENT VALVES, PIPES, AND FITTINGS FURNISHED.
● 10" BUTTERFLY VALVE ON BY-PASS LINE SHALL BE CHAINED AND PADLOCKED IN THE FULLY CLOSED POSITION. THE 10" BUTTERFLY GATE VALVES ON THE MAIN LINE ADJACENT TO THE ALTITUDE VALVE SHALL BE CHAINED AND PADLOCKED IN FULLY OPEN POSITION AND SEALED IN ACCORDANCE WITH N.F.P.A. 26.

Owner:

RIVERSIDE REGIONAL JAIL AUTHORITY

Project:

RIVERSIDE REGIONAL JAIL
PRINCE GEORGE COUNTY, VIRGINIA

Notes:

Mark	Date	Description

REVISIONS

Key Plan

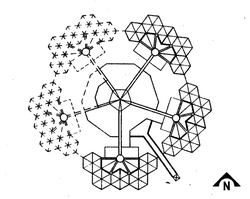

Architects / Engineers:

VOSBECK
DMJM
INCORPORATED

Architecture Planning Engineering
Suite 800, 1900 M Street, N.W., Washington, D.C. 20036

COMMONWEALTH OF VIRGINIA
GEORGE I. WILSON, JR.
No. 9707
PROFESSIONAL ENGINEER

Consultants:

LV. Harris and Assoc. Inc.	Associated Architects
Correctional Services Group	Program Verif, Operations
MMM Design Group	Civil Engineering
Systech Group, Inc.	Security
Foodesign Assoc. Inc.	Food Service
Leonard Smith and Assoc. Inc.	Cost Estimating
Polysonics	Acoustical Consultant

Drawing Title:

ELEVATED WATER TANK
TANK PIPING DETAILS

DMJM Project No. 3053

Scale: AS SHOWN	Date: JULY 19, 1994	Drawing No.
Drawn By: CADD#TSC	Approved By: SLC	C-12