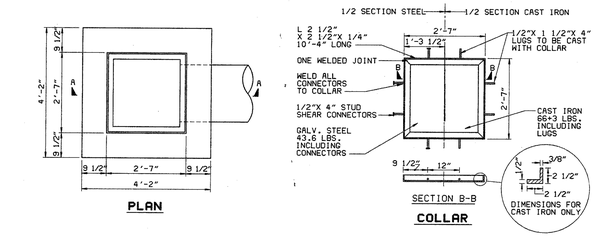

PLAN

COLLAR

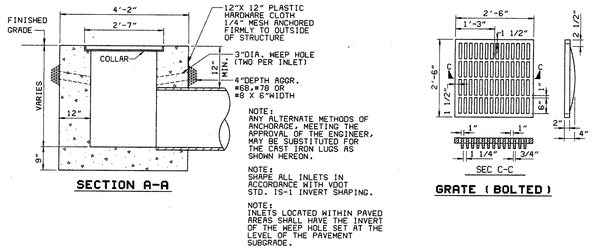

SECTION A-A

NOTE:
ANY ALTERNATE METHODS OF ANCHORAGE, MEETING THE APPROVAL OF THE ENGINEER, MAY BE SUBSTITUTED FOR THE CAST IRON LUGS AS SHOWN HEREON.

NOTE:
SHAPE ALL INLETS IN ACCORDANCE WITH VDOT STD. IS-1 INVERT SHAPING.

NOTE:
INLETS LOCATED WITHIN PAVED AREAS SHALL HAVE THE INVERT OF THE WEEP HOLE SET AT THE LEVEL OF THE PAVEMENT SUBGRADE.

GRATE (BOLTED)

DI-1 DROP INLET

NOT TO SCALE

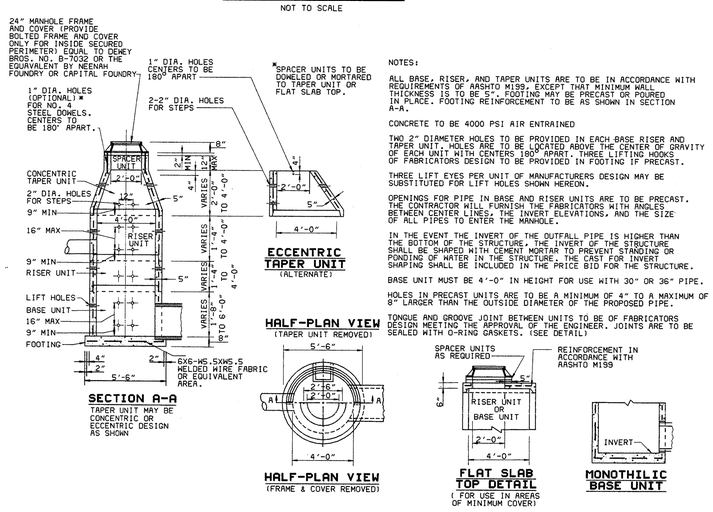

SECTION A-A
TAPER UNIT MAY BE CONCENTRIC OR ECCENTRIC DESIGN AS SHOWN

NOTES:

ALL BASE, RISER, AND TAPER UNITS ARE TO BE IN ACCORDANCE WITH REQUIREMENTS OF AASHTO M199, EXCEPT THAT MINIMUM WALL THICKNESS IS TO BE 5". FOOTING MAY BE PRECAST OR POURED IN PLACE. FOOTING REINFORCEMENT TO BE AS SHOWN IN SECTION A-A.

CONCRETE TO BE 4000 PSI AIR ENTRAINED

TWO 2" DIAMETER HOLES TO BE PROVIDED IN EACH BASE RISER AND TAPER UNIT. HOLES ARE TO BE LOCATED ABOVE THE CENTER OF GRAVITY OF EACH UNIT WITH CENTERS 180° APART. THREE LIFTING HOOKS OF FABRICATORS DESIGN TO BE PROVIDED IN FOOTING IF PRECAST.

THREE LIFT EYES PER UNIT OF MANUFACTURERS DESIGN MAY BE SUBSTITUTED FOR LIFT HOLES SHOWN HEREON.

OPENINGS FOR PIPE IN BASE AND RISER UNITS ARE TO BE PRECAST. THE CONTRACTOR WILL FURNISH THE FABRICATORS WITH ANGLES BETWEEN CENTER LINES, THE INVERT ELEVATIONS, AND THE SIZE OF ALL PIPES TO ENTER THE MANHOLE.

IN THE EVENT THE INVERT OF THE OUTFALL PIPE IS HIGHER THAN THE BOTTOM OF THE STRUCTURE, THE INVERT OF THE STRUCTURE SHALL BE SHAPED WITH CEMENT MORTAR TO PREVENT STANDING OR PONDING OF WATER IN THE STRUCTURE. THE COST FOR INVERT SHAPING SHALL BE INCLUDED IN THE PRICE BID FOR THE STRUCTURE.

BASE UNIT MUST BE 4'-0" IN HEIGHT FOR USE WITH 30" OR 36" PIPE.

HOLES IN PRECAST UNITS ARE TO BE A MINIMUM OF 4" TO A MAXIMUM OF 8" LARGER THAN THE OUTSIDE DIAMETER OF THE PROPOSED PIPE.

TONGUE AND GROOVE JOINT BETWEEN UNITS TO BE OF FABRICATORS DESIGN MEETING THE APPROVAL OF THE ENGINEER. JOINTS ARE TO BE SEALED WITH O-RING GASKETS. (SEE DETAIL)

PRECAST STORM MANHOLE FOR 12"-36" PIPE

NOT TO SCALE

NOTES:

TYPE A OR B TREATMENT TO BE AS SPECIFIED ON THE PLANS.

TYPE B☐ THE TOP 6" OF STONE SHALL BE GROUTED IN ACCORDANCE WITH VDOT SECTION 418.03, EXCEPT THAT THE PORTION BELOW THE TOP 6" MAY BE CHOKED WITH FINE MATERIAL.

RIP RAP FILLER CLOTH BEDDING TO BE INSTALLED UNDER ALL EROSION CONTROL STONE IN ACCORDANCE WITH THE VDOT SPECIFICATIONS.

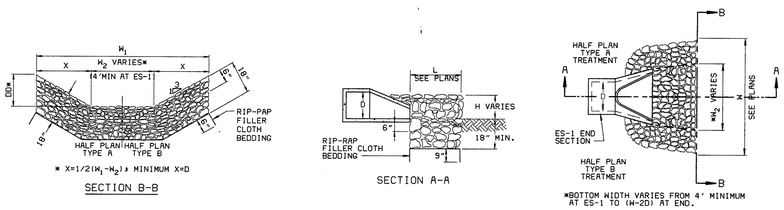

* X=1/2(H1-H2), MINIMUM X=D

SECTION B-B

SECTION A-A

*BOTTOM WIDTH VARIES FROM 4' MINIMUM AT ES-1 TO (W-2D) AT END.

STONE FOR EROSION CONTROL (EC-1)

NOT TO SCALE

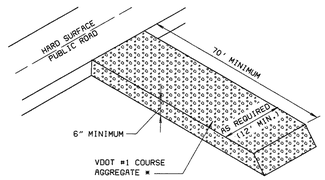

TEMPORARY CONSTRUCTION ENTRANCE

NOT TO SCALE

* NOTE:
VDOT #1 COARSE AGGREGATE SHALL BE INSTALLED ON A 6oz. MINIMUM NON-WOVEN FILTER FABRIC OR 4oz. MINIMUM WOVEN FILTER FABRIC.

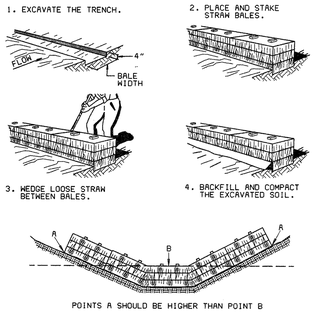

STRAW BALE BARRIER CONSTRUCTION

NOT TO SCALE

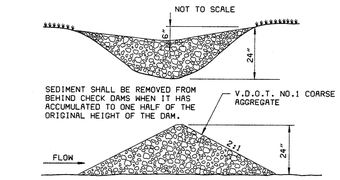

ROCK CHECK DAM DETAIL

NOT TO SCALE

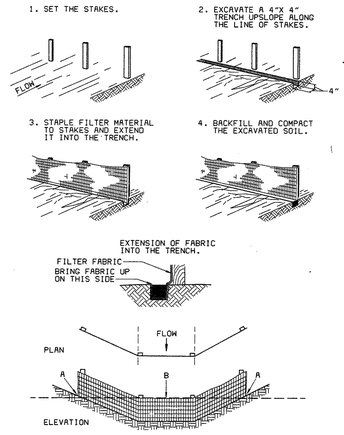

SILT FENCE CONSTRUCTION

NOT TO SCALE

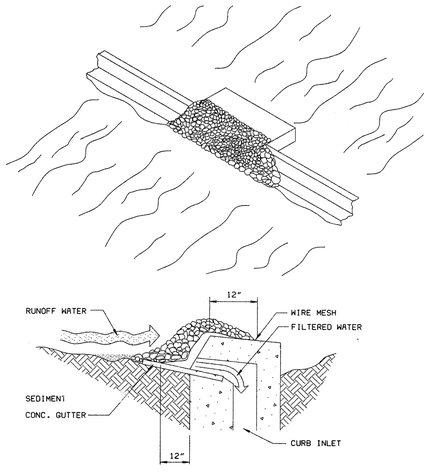

GRAVEL CURB INLET SEDIMENT FILTER

NOT TO SCALE

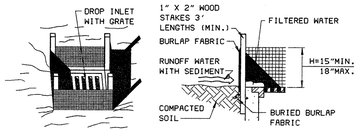

DROP INLET SEDIMENT FILTER

NOT TO SCALE

EROSION CONTROL NOTES

1. THE EROSION AND SEDIMENT CONTROL MEASURES WILL BE INSTALLED AND MAINTAINED IN ACCORDANCE WITH VIRGINIA REGULATIONS VA 625-02-00 EROSION AND SEDIMENT CONTROL REGULATIONS, THE VIRGINIA EROSION AND SEDIMENT CONTROL HAND BOOK (VESCH), AND PRINCE GEORGE COUNTY REGULATIONS.
2. WHEN THE HANDBOOK CONFLICTS WITH THE REGULATIONS, THE REGULATIONS SHALL TAKE PRECEDENCE.
3. THE CONTRACTOR SHALL INSPECT THE EROSION CONTROL MEASURES AT LEAST ONCE IN EVERY TWO WEEK PERIOD AND AFTER EACH RUNOFF-PRODUCING STORM EVENT. DEFICIENCIES SHALL BE CORRECTED IMMEDIATELY.
4. SEDIMENT BASINS AND TRAPS, PERIMETER DIKES, SEDIMENT BARRIERS AND OTHER MEASURES INTENDED TO TRAP SEDIMENT SHALL BE CONSTRUCTED AS A FIRST STEP IN ANY LAND-DISTURBING ACTIVITY AND SHALL BE MADE FUNCTIONAL BEFORE UPSLOPE LAND DISTURBANCE TAKES PLACE.
5. STRAW BALE BARRIERS SHALL BE REPLACED EVERY 3 MONTHS OR AS DIRECTED BY THE ENGINEER.
6. ALL TEMPORARY EROSION AND SEDIMENT CONTROL MEASURES ARE TO BE REMOVED WITHIN 30 DAYS OF FINAL STABILIZATION, AS DETERMINED BY THE COUNTY ENGINEER.
7. A COPY OF THE APPROVED EROSION AND SEDIMENT CONTROL PLAN WILL BE MAINTAINED ON THE SITE AT ALL TIMES.
8. STABILIZATION MEASURES SHALL BE APPLIED TO EARTHEN STRUCTURES SUCH AS DAMS, DIKES AND DIVERSIONS IMMEDIATELY AFTER INSTALLATION.
9. PERMANENT OR TEMPORARY SOIL STABILIZATION SHALL BE APPLIED TO DENUDED AREAS WITHIN SEVEN DAYS AFTER FINAL GRADE IS REACHED ON ANY PORTION OF THE SITE. TEMPORARY SOIL STABILIZATION SHALL BE APPLIED WITHIN SEVEN DAYS TO DENUDED AREAS THAT MAY NOT BE AT FINAL GRADE BUT WILL REMAIN DORMANT (UNDISTURBED) FOR LONGER THAN 30 DAYS. PERMANENT STABILIZATION SHALL BE APPLIED TO AREAS THAT ARE TO BE LEFT DORMANT FOR MORE THAN ONE YEAR.
10. SOIL STOCK PILES SHALL BE STABILIZED AND PROTECTED WITH VEGETATION AND SILT FENCES AROUND PERIMETER OF PILES.
11. THE CONTRACTOR IS RESPONSIBLE FOR THE DISPOSAL AND STABILIZATION OF FILL MATERIAL IN ACCORDANCE WITH VIRGINIA REGULATIONS VR 625-02-00 EROSION AND SEDIMENT CONTROL REGULATIONS. AN EROSION CONTROL PLAN MUST BE SUBMITTED BY THE CONTRACTOR TO THE COUNTY ENGINEER FOR REVIEW AND APPROVAL PRIOR TO ANY LAND DISTURBING ACTIVITIES AT ANY OFF-SITE DISPOSAL AREAS.
12. WATER PRODUCED FROM DEWATERING OPERATIONS SHALL BE PUMPED INTO A SEDIMENT BASIN.
13. THE COUNTY ENGINEER MUST BE NOTIFIED ONE WEEK PRIOR TO THE PRE-CONSTRUCTION CONFERENCE, ONE WEEK PRIOR TO THE COMMENCEMENT OF LAND DISTURBING ACTIVITY, AND ONE WEEK PRIOR TO THE FINAL INSPECTION.
14. SOIL STOCKPILES SHALL BE LOCATED AS DIRECTED BY THE ENGINEER.
15. THE CONTRACTOR SHALL REGULARLY MOW ALL GRASS ON THE ENTIRE PROPERTY AND ALONG THE ENTRANCE ROAD FROM START OF CONSTRUCTION UNTIL FINAL ACCEPTANCE BY THE OWNER. THE CONTRACTOR SHALL PERFORM ALL MEASURES NECESSARY TO CONTROL DUST WITHIN THE PROPERTY.
16. THE EXISTING STORMWATER MANAGEMENT POND IS NOT INTENDED TO SERVE AS A TEMPORARY SEDIMENT BASIN. THE CONTRACTOR IS TO INSURE THAT NO SEDIMENT ENTERS INTO THE POND BY INSTALLING INLET SEDIMENT FILTERS, ROCK CHECK DAMS, SILT FENCES, ETC. UPSTREAM OF THE POND.
17. THE CONTRACTOR IS RESPONSIBLE TO MAINTAIN THE EXISTING SEDIMENT TRAPS (2). THESE DEVICES SHALL BE CLEANED OUT IN ACCORDANCE WITH VESCH STD. & SPEC. 3.13 AND SHALL BE COMPLETELY REMOVED AND THE AREA TOPSOILED AND SEEDED UPON STABILIZATION OF ALL SITE AREAS.

TEMPORARY SEEDING SCHEDULE

SEED MUST BEAR AN OFFICAL "CERTIFIED SEED" LABEL
SEED MIXTURE, SEEDING RATE AND DATES SHALL BE:

SPECIES	SEEDING RATE 1000 FT²	DATES 2-15 4-30	5-1 9-1	9-1 11-15	11-15* 2-15
OATS	2 LBS.	x	-	-	-
RYE	3 LBS.	x	-	x	x
GERMAN MILLET	1-1/2 LBS.	-	x	-	-
ANNUAL RYEGRASS	1-1/2 LBS.	x	-	x	-
WEEPING LOVEGRASS	1 OZ.	-	x	-	-
KOREAN LESPEDEZA	1/2 LB.	x	x	-	-
CRIMSON CLOVER	6 OZ.	-	-	x	-

*NOTE: USE MULCH WITH WINTER RYE BETWEEN 11-15 TO 2-15.

MULCH: SHALL BE HAY OR STRAW.
NOTE: x MAY BE PLANTED BETWEEN THESE DATES
- MAY NOT BE PLANTED BETWEEN THESE DATES

NOTE: REFER TO "EROSION CONTROL" SPECIFICATIONS FOR APPLICATION RATES OF LIME, FERTILIZER, MULCH, ETC.

PERMANENT SEEDING SCHEDULE

SEED SHALL BE SOWN BETWEEN MARCH 15 AND MAY 1 OR BETWEEN AUGUST 15 AND OCTOBER 1. SEEDING SHALL BE AT THE RATE OF 250 POUNDS PER ACRE.

SEED MIXTURE SHALL BE AS FOLLOWS:

90% TALL FESCUE
10% KENTUCKY BLUEGRASS

NOTE: SEEDING SHALL BE SOWN ONLY DURING OPTIMUM PERIODS SPECIFIED.

MULCH: SHALL BE STRAW, HAY, OR WOOD CELLULOSE FIBER MULCH.

NOTE: REFER TO "ESTABLISHING VEGITATION" SPECIFICATION FOR APPLICATION RATES FOR LIME, FERTILIZER, MULCH, ETC.

Owner:

RIVERSIDE REGIONAL JAIL AUTHORITY

Project:

RIVERSIDE REGIONAL JAIL

PRINCE GEORGE COUNTY, VIRGINIA

Notes:

Mark:	Date:	Description:

REVISIONS

Key Plan:

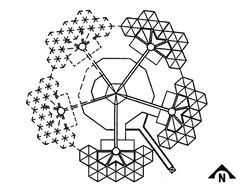

Architects / Engineers:

VOSBECK
DMJM
INCORPORATED

Architecture Planning Engineering
Suite 800, 1900 M Street, N.W., Washington, D.C. 20036

COMMONWEALTH OF VIRGINIA
STEPHEN E. CASTIGLIONI
No. 12997
PROFESSIONAL ENGINEER

Consultants:

LV. Harris and Assoc. Inc.	Associated Architects
Correctional Services Group	Program Verif, Operations
MMM Design Group	Civil Engineering
Systech Group, Inc.	Security
Foodesign Assoc. Inc.	Food Service
Leonard Smith and Assoc. Inc.	Cost Estimating
Polysonics	Acoustical Consultant

Drawing Title:

DRAINAGE AND EROSION CONTROL DETAILS

DMJM Project No. 3053

Scale:	Date:	Drawing No.
NONE	JULY 19, 1994	C-10
Drawn By: CADD/TSC	Approved By: SLC	