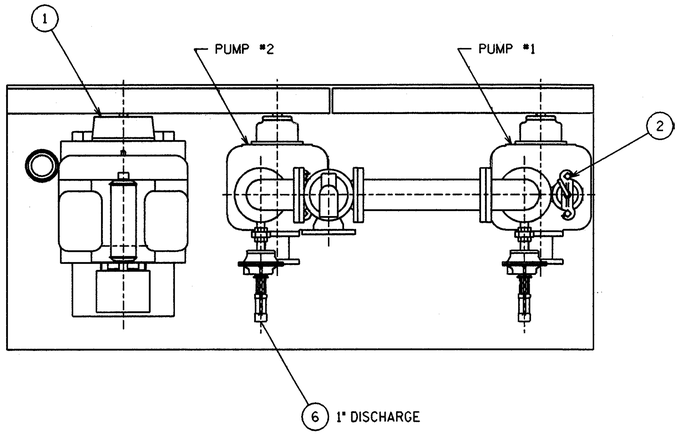

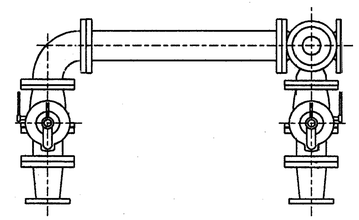

LEFT HAND DISCHARGE

ITEM	DESCRIPTION	MATERIAL & SIZE
1	MOTOR	CAST IRON
2	PUMP	CAST IRON T3A-B
3	ENGINE (WISCONSIN)	MODEL
4	DISCHARGE ELBOW 90°	CAST IRON
5	DISCHARGE PLUG VALVE	CAST IRON 3-WAY
6	AIR RELEASE VALVE	CAST IRON 1" (SHIPPED LOOSE)
7	DISCHARGE CHECK VALVE	CAST IRON
8	BELT GUARD ASSY	STEEL
9	PUMP & MOTOR BASE ASSY	STEEL

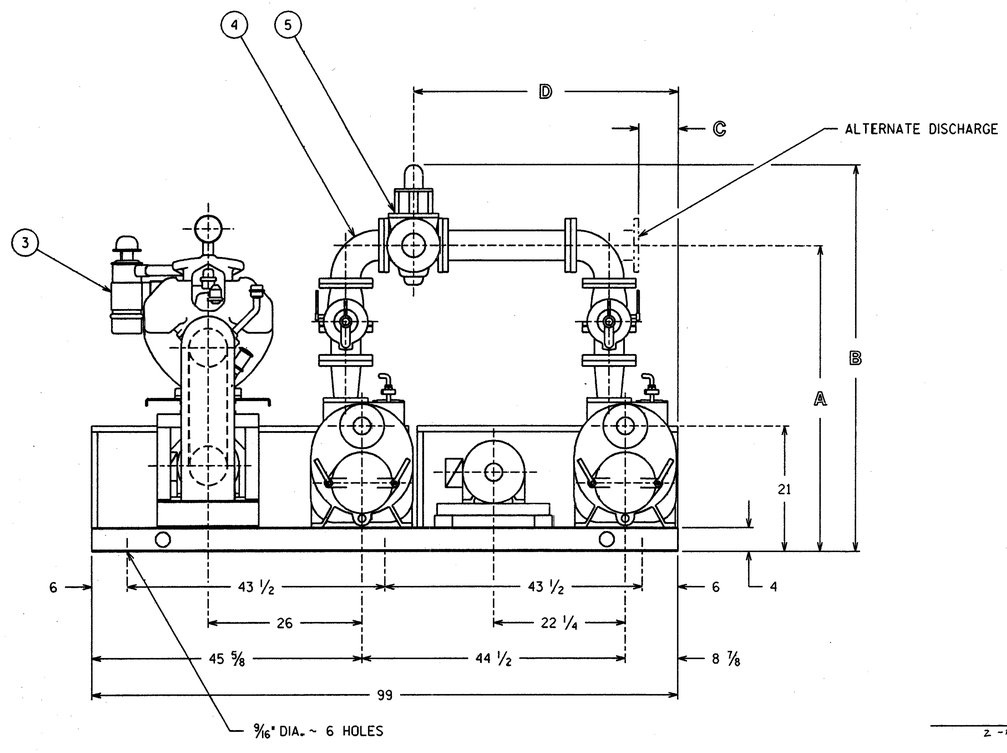

CENTER DISCHARGE

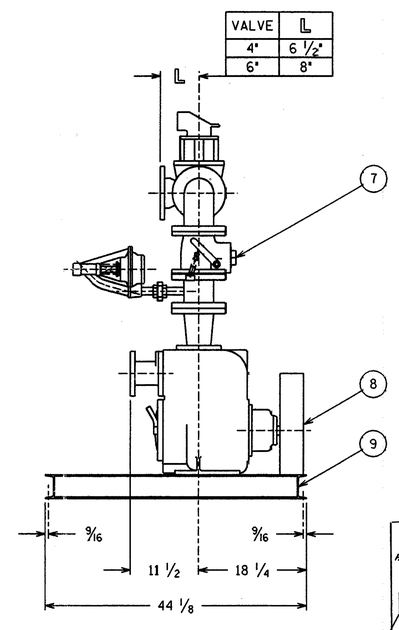

VALVE	L
4"	6 1/2"
6"	8"

CENTER DISCHARGE					
PLUMBING			A	B	D
SUCT.	DISCH.	HDR.			
3"	4"	4"	51 1/2"	65 1/8"	44 5/8"
3"	4"	6"	53"	67 7/8"	42 1/4"

LEFT HAND DISCHARGE					
PLUMBING			A	B	C
SUCT.	DISCH.	HDR.			
3"	4"	4"	51 1/2"	56"	6 5/8"
3"	4"	6"	62"	67 1/2"	5 3/4"

Ø 3"x4" 90° FLANGED REDUCING ELBOW
⊖ 4"x6" 90° FLANGED REDUCING ELBOW

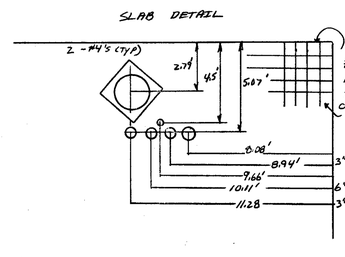

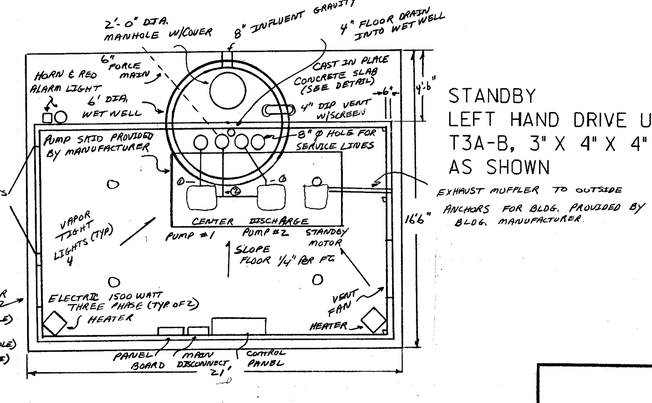

STANDBY
LEFT HAND DRIVE UNIT
T3A-B, 3" X 4" X 4"
AS SHOWN

RIVERS EDGE FORCE MAIN

BLACKWATER DISTRICT/ PRINCE GEORGE CO./ VIRGINIA

PROPOSED PUMP STATION

SCALE: NTS	APPROVED BY:	DRAWN BY SEM
DATE: 6/27/97	SEM	REVISED
RIVERS EDGE SUBDIVISION PUMP STATION		
		DRAWING NUMBER 8a OF 8