STA 0+00
INSTALL 4" TAP ON 4" AC PIPE
INCREASE IMMEDIATELY TO 6"
C900 PIPE

EXISTING WELL HOUSE
* BM FINISHED FLOOR ASSUME 100 FT.

STA 3+00
90° BEND
W/THRUST BLOCK

DISCONNECT 2" GALVANIZED PIPE FROM 4" AC & CAP 2" CONNECTION

STA 3+40
FIRE HYDRANT ASSEMBLY
6" G.V.
6"x6" TEE
6" W/L MIN 5' FROM E/P

STA 11+80
6"x6" TEE
6" G.V.
FIRE HYDRANT

OPEN CUT SEE REPAIR

STA 20+10
6"x6" TEE
6" G.V.
FIRE HYDRANT

STA 20+40
90° BEND
W/THRUST BLOCK
6" G.V.

* REPAIR ASPHALT DRIVEWAY PATCH 2" S-5

MATCH LINE STA 21+10

YORKDALE DR.
RT. 1408
RT. 1409
BOYTON ST.
DOUGLAS LN.
RT. 1409
8" SAN. SEWER EXISTING
8" SAN. SEWER EXISTING
BICORS DRIVE RT 1407
MASON STREET
6" FORCE MAIN
8" SAN. SEWER

11401 N/F Sepulveda	11405 N/F Goolsby	11409 N/F Thomas	11413 N/F Williams	11417 N/F Cain	11501 N/F Cooper	11505 N/F Richer	11509 N/F Bishop	11513 N/F England	11517 N/F Hill	11601 N/F Bowers	11605 N/F Thomas	2600 N/F Boyette Lot-4					
		N/F Ramsey 11408	N/F Osmore 11412	N/F Davis 11416	N/F Bowers 11500	N/F Price 11504		N/F Firment 11512	N/F Hall 11516	N/F Cole 11600	N/F Smith 11604	N/F Alexander 11608	N/F Walthall 11612				

EXISTING 2" GALV.
NEW SERVICE

EXISTING GROUND
MIN 18" VERTICAL SEPERATION
6" PVC FM
PROPOSED 6" PVC C900
MAINTAIN 3½ COVER
MATCH LINE

100
90

0+0 1+0 2+0 3+0 4+0 5+0 6+0 7+0 8+0 9+0 10+0 11+0 12+0 13+0 14+0 15+0 16+0 17+0 18+0 19+0 20+0 21+0

2608 N/F Morrissette Jr	2604 N/F Usher	2600 N/F Meadows	2508 N/F Indelicato	2504 N/F Stump																	

LOT 5
LOT 3
LOT 4
LOT 2
LOT 6
LOT 12
LOT 11
LOT 10
LOT 9
LOT 8
LOT 7

FRANKIE LANE
RT 1426

STA 24+60
6"x6" TEE
6" G.V.
FIRE HYDRANT

STA 29+80
6" G.V.
1 JOINT OF PIPE
PLUG AND BLOCK

MATCH LINE STA 21+10

EXISTING GROUND
MAINTAIN 3½ COVER
PROPOSED 6" PVC C900

100
90
80

21+0 22+0 23+0 24+0 25+0 26+0 27+0 28+0 29+0 30+0

NOTES:

1) WATER SERVICE CONNECTIONS ARE TO BE BORED UNDER ROAD AND CONNECTED TO EXISTING WATER SERVICE YOKE, COPPER PIPE (TYPE K), WITH COMPRESSION FITTINGS TO BE USED FOR SERVICE LINE.
2) ALL WORK TO BE IN ACCORDANCE WITH PRINCE GEORGE COUNTY STANDARD SPECIFICATIONS AND STATE HEALTH DEPARTMENT WATERWORKS REGULATIONS
3) SERVICE DOUBLE BAND STAINLESS STEEL EPOXY COATED

VICINITY MAP (NTS)

WEST TO HOPEWELL
RT. 10
EAST TO SURRY
KAY ST.
BLOCKS DR.
TAR BAY RD.
RIDGE RD.
WELL HOUSE
YORKDALE DR.
MASON ST.
GOODWIN LN.
EARHART LN.

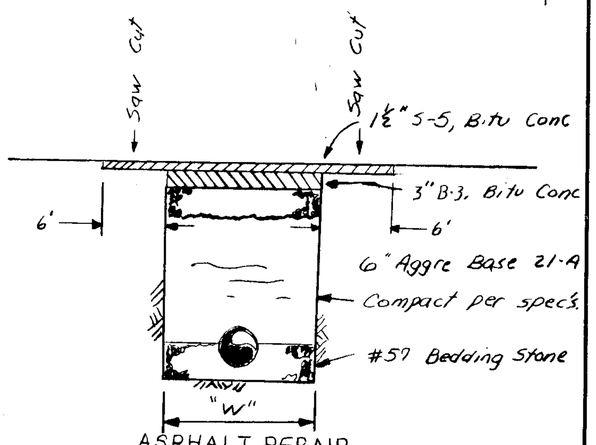

ASPHALT REPAIR

RIVER'S EDGE WATERMAIN REPLACEMENT

DATE: 12/01
SCALE:
HORIZ: 1" = 100 FT.
VERTICAL: 1" = 10 ft
DESIGNED BY: S.E. McBride
DRAWN BY: M. ELLIS

COUNTY OF PRINCE GEORGE, VA
DEPARTMENT of ENGINEERING
PRINCE GEORGE, VIRGINIA. 23875
P.O. BOX 68
(804) 733-2625

SOUTHERN PHOTO - GREENSBORO N4-9937