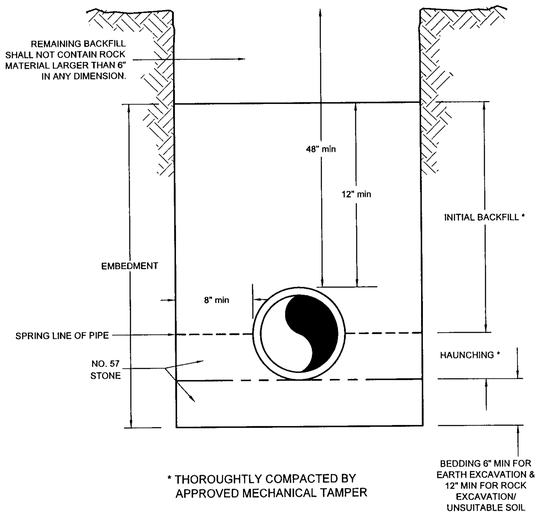

PIPE BEDDING
NTS

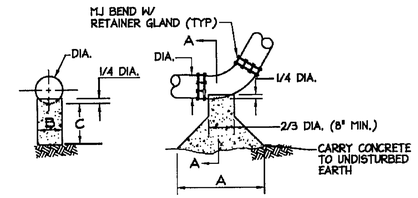

BUTTRESSES FOR VERTICAL BENDS

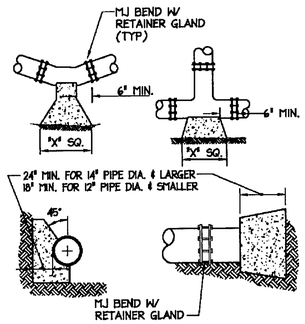

HORIZONTAL BEND DETAIL

BEND	DIMENSION	LENGTH
11.25°	A	26"
	B	17"
	C	9"
	CY	0.06
22.5°	A	34"
	B	23"
	C	12"
	CY	0.14
45°	A	48"
	B	32"
	C	16"
	CY	0.34

PIPE SIZE	DIMENSION "X"
6"	18"
8"	24"
10"	30"
12"	36"
14"	42"
16"	48"

THRUST BLOCK
NTS

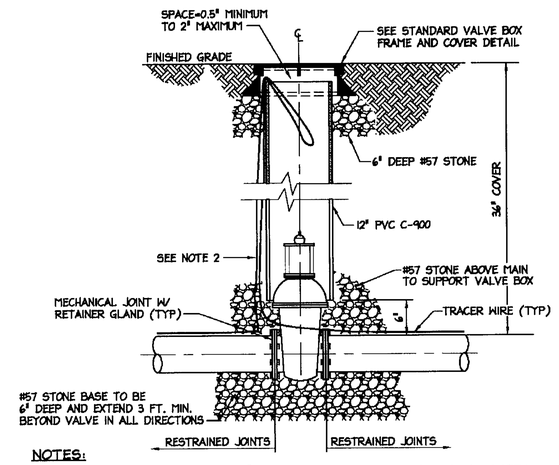

NOTES:

1. IF OPERATING NUT IS GREATER THAN 48" BELOW TOP OF VALVE BOX FRAME, A VALVE STEM EXTENSION MAY BE INSTALLED. THE EXTENSION SHALL REPLACE OR BE SECURELY ATTACHED TO THE NORMAL 2 INCH SQUARE OPERATING NUT, SHALL BE AT LEAST AS STRONG AS THE VALVE STEM, AND SHALL BE COATED IN ACCORDANCE WITH AWWA C550. VALVE STEM EXTENSIONS MUST BE APPROVED BY THE LOCALITY.
2. PLASTIC COATED 10 GAUGE SOLID COPPER TRACER WIRE TO BE ATTACHED WITH PLASTIC STRAPPING EVERY 10 FEET OF LENGTH. WIRE TO BE LOOPED THROUGH VALVE BOX AND EXTEND 12 INCHES ABOVE FINISHED GRADE AND COILED BACK INTO VALVE BOX.

VALVE SETTING
NTS

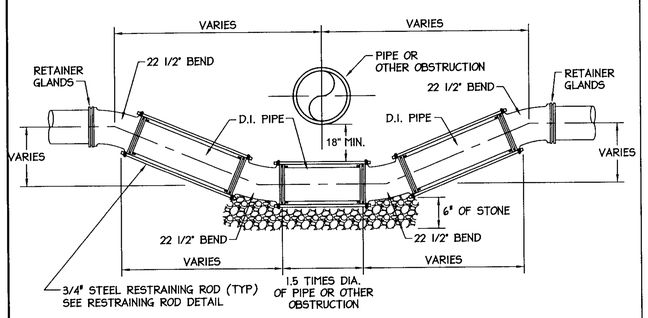

NOTES:
1. SEE PLANS FOR OFFSET DIMENSIONS. NON-UNIFORM OFFSET REQUIRES SPECIAL DESIGN.

OBSTRUCTION BYPASS DETAIL
NTS

NOTE:
MARK WITH A "W" FOR WATER DISTRIBUTION SYSTEMS OR "S" FOR SANITARY SYSTEMS. TOP & BOTTOM OF LETTER DESIGNATION TO BE IN LINE WITH NOTCHES.

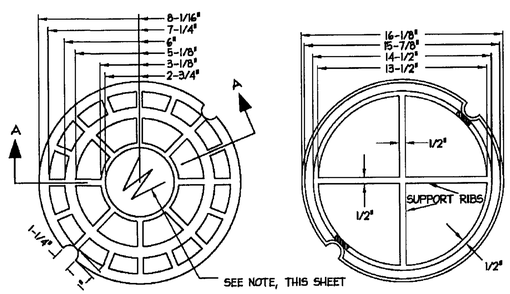

COVER: TOP COVER: BOTTOM

BOTTOM SUPPORT RING TO BE NOTCHED DIRECTLY UNDER PICK HOLE ON BOTH SIDES. NOTCHES TO BE CENTERED BETWEEN SUPPORT RIBS.

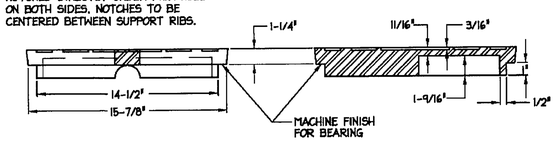

SIDE VIEW SECTION A-A

VALVE BOX
NTS

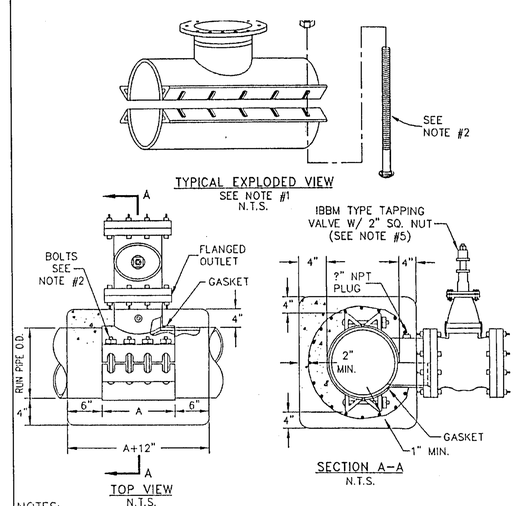

NOTES:

1. FULL BACK SADDLES ONLY, EXCEPT IN ACCORDANCE WITH PIPE MANUFACTURES RECOMMENDATIONS
2. THE NUMBER, SPACING, SIZE AND INSTALLATION OF BOLTS SHALL BE IN ACCORDANCE WITH SADDLE MANUFACTURES RECOMMENDATIONS.
3. ALL TAPPING SADDLES SHALL RECEIVE 4", 3000 PSI CONCRETE COVER WITH 6"x6"x6 GAUGE WELDED WIRE REINFORCEMENT.
4. CONTRACTOR SHALL SUPPLY TO ENGINEER THREE (3) CLEAR COPIES OF TAPPING SADDLE MANUFACTURES CATALOG CUT AND INSTALLATION INSTRUCTIONS 14 DAYS PRIOR TO INSTALLATION OF SADDLE.
5. TAPPING VALVE TO MEET ANSI/AWWA STANDARDS C500 AND C509.

TAPPING SADDLE
NTS

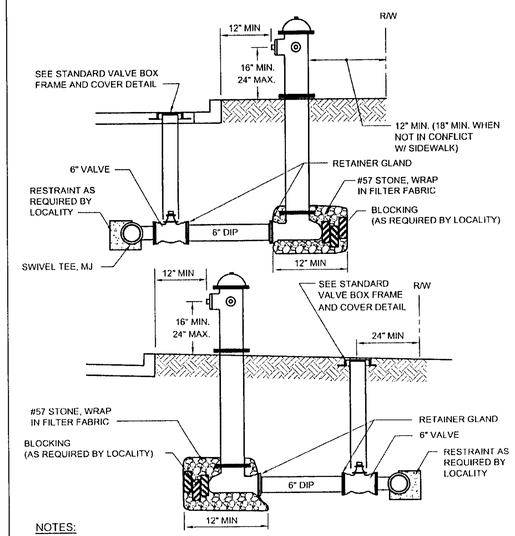

NOTES:

1. HYDRANT TO BE SET WITH BREAKABLE COUPLING APPROXIMATELY 3" ABOVE FINISHED GRADE.
2. STEAMER NOZZLE IS TO FACE ROADWAY UNLESS OTHERWISE NOTED.
3. TRACER WIRE REQUIRED.
4. ALL VALVES TO BE MJ.

HYDRANT DETAIL
NTS

NO.	DATE	REVISION	APPROVAL
1	2/16/07	REVISED PER BCOM LRT DTD 1-19-07	KMB

Bury+Partners
ENGINEERING SOLUTIONS
4095 Ironbound Road, Suite 200
Williamsburg, Virginia 23188
Tel. (757) 229-1776 Fax (757) 229-4683
Bury+Partners, Inc. ©Copyright 2006

COMMONWEALTH OF VIRGINIA
KENNETH M. BAYBUTT
No. 028257
2/16/07
PROFESSIONAL ENGINEER

MISCELLANEOUS DETAILS

RICHARD BLAND COLLEGE CONSTRUCTION OF ELEVATED WATER STORAGE TANK

PRINCE GEORGE & DINWIDDIE COUNTY VIRGINIA

PLOTTING SCALE: NTS
DATE PLOTTED: 12/22/06
FILE: M4.dwg
DRAWN BY: BCH
DESIGNED BY: SAR
REVIEWED BY: KMB
PROJECT NO.: 210640004

SHEET
M4
OF

I:\21064 - Richard Bland College\RBC Tanks\Sheets\Water\Storage Tank Drawings\M4.dwg