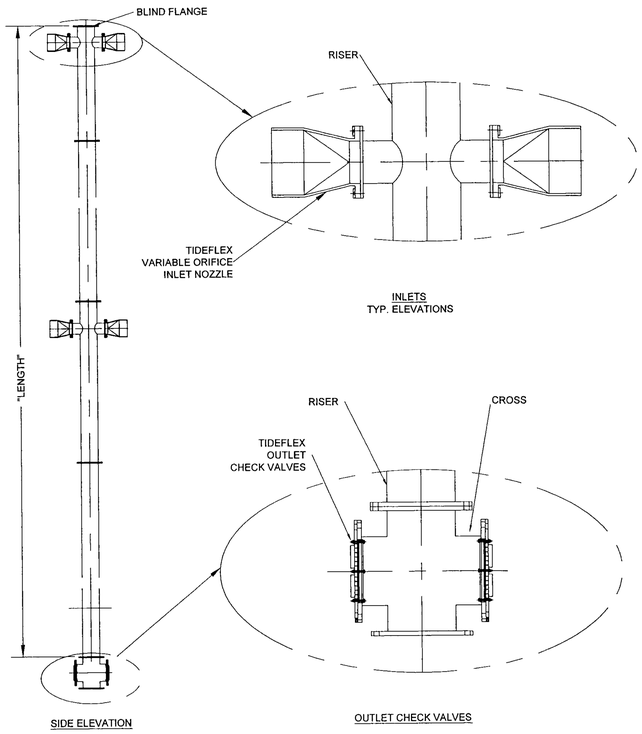

TIDEFLEX MIXING SYSTEM DETAILS

SCALE: NTS

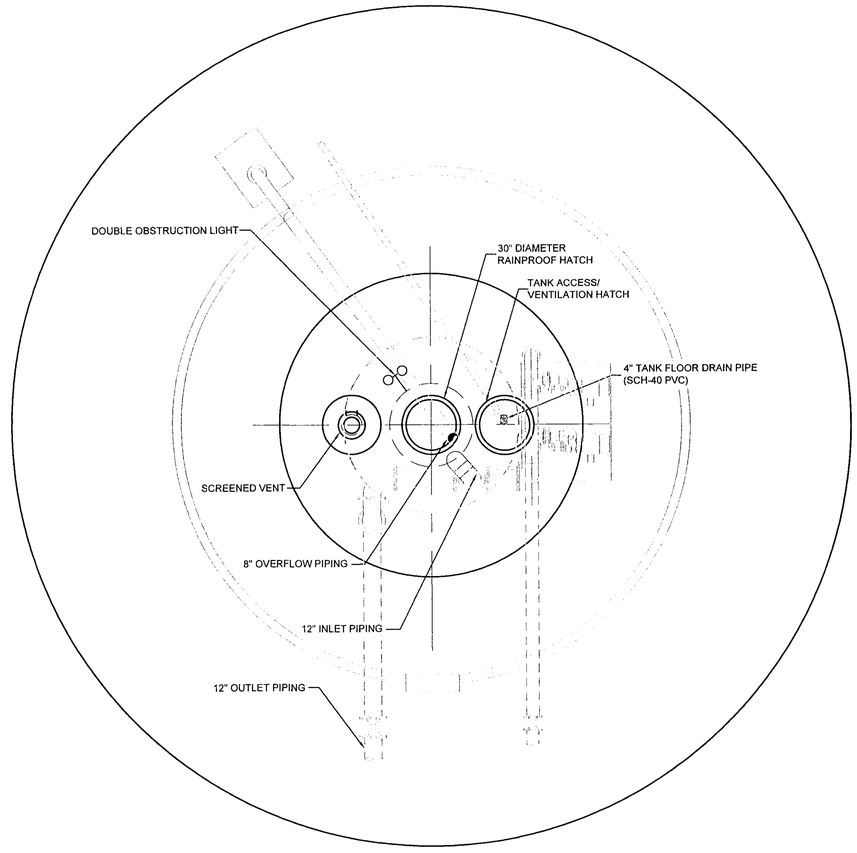

TANK ROOF AND PIPING ORIENTATION

SCALE: NTS

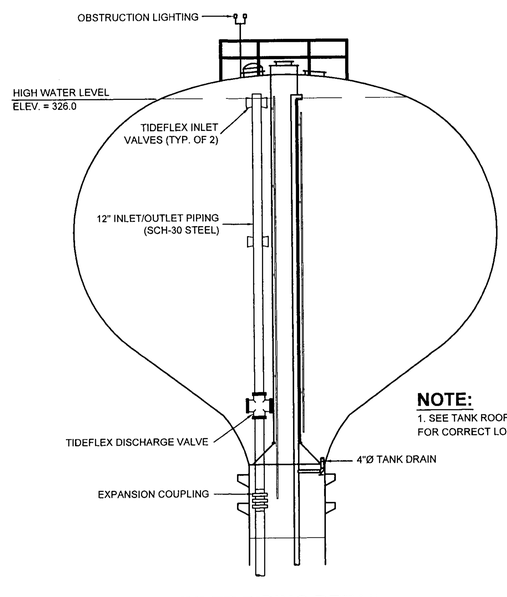

INLET PIPING DETAIL

SCALE: NTS

NOTE:

1. SEE TANK ROOF AND PIPING ORIENTATION THIS SHEET FOR CORRECT LOCATIONS OF PIPING

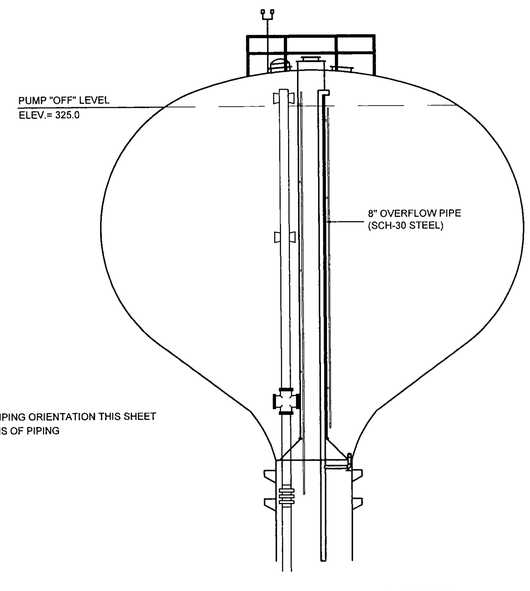

OVERFLOW PIPING DETAIL

SCALE: NTS

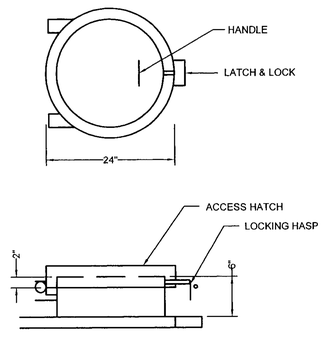

STORAGE TANK ACCESS HATCH DETAIL

SCALE: 1" = 1'-0"

BEFORE DIGGING CALL "MISS UTILITY" OF VIRGINIA AT 1-800-552-7001

NO.	DATE	REVISION	APPROVAL
2	3/23/07	REVISED PER BCOM & COUNTY LTR DTD 3-6-07	KMB
1	2/16/07	REVISED PER BCOM LRT DTD 1-18-07	KMB

Bury+Partners
ENGINEERING SOLUTIONS
4095 Ironbound Road, Suite 200
Williamsburg, Virginia 23188
Tel. (757) 229-1776 Fax (757) 229-4683
Bury+Partners, Inc. ©Copyright 2006

COMMONWEALTH OF VIRGINIA
KENNETH M. BAYBUTT
No. 028867
3/23/07
PROFESSIONAL ENGINEER

STORAGE TANK DETAILS

RICHARD BLAND COLLEGE CONSTRUCTION OF ELEVATED WATER STORAGE TANK

PRINCE GEORGE & DINWIDDIE COUNTY VIRGINIA

PLOTTING SCALE: AS NOTED
DATE PLOTTED: 12/22/06
FILE: M3.dwg
DRAWN BY: BCH
DESIGNED BY: SAR
REVIEWED BY: KMB
PROJECT NO.: 210640004

SHEET
M3
OF

I:\21064 - Richard Bland College\RBC Tanks\Sheets\Water\Storage Tank Drawings\M3.dwg