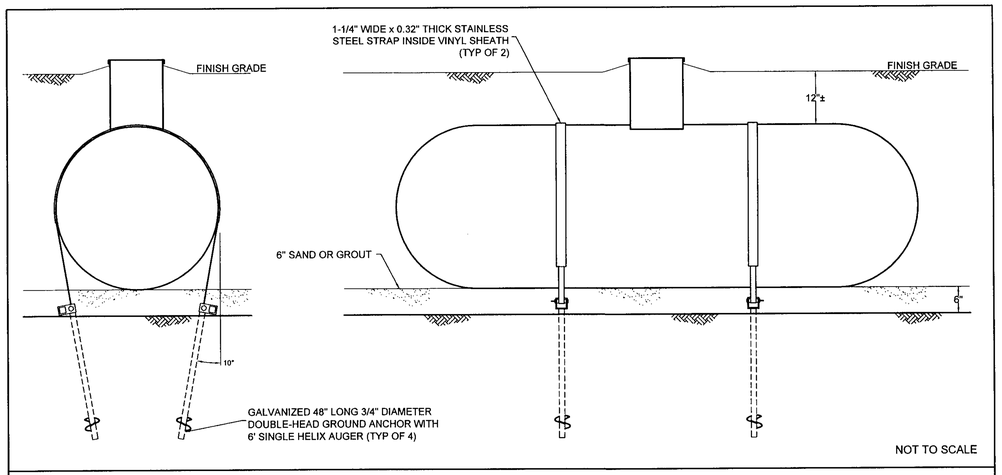

PROPANE TANK ANCHORING DETAILS

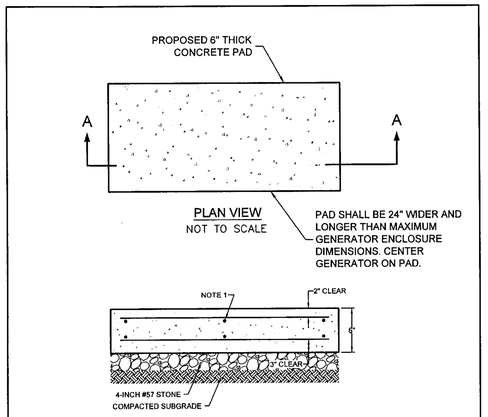

PARTIAL SECTION A-A
NOT TO SCALE

NOTES:

1. #5 @ 12" T & B, BW CONCRETE PAD REBAR.
2. ALL CONCRETE SHALL BE NORMAL WEIGHT WITH A MINIMUM 28 DAY COMPRESSIVE STRENGTH OF 2500 PSI CONCRETE SHALL CONTAIN 6% ± 1% ENTRAINED AIR.
3. ALL REINFORCEMENT SHALL CONFORM TO ASTM AGIS GRADE 60.
4. CONCRETE MASONRY UNITS SHALL CONFORM TO ASTM C90. MORTAR SHALL BE ASTM C270 TYPE S. GROUT SHALL CONFORM TO ASTM C476.
5. PRINCE GEORGE COUNTY TYPE SOIL
6. DESIGN BEARING PRESSURE 2000 PSI
7. ANCHOR BOLTS INSTALLED BY EQUIPMENT CONTRACTOR.

GENERATOR PAD DETAIL

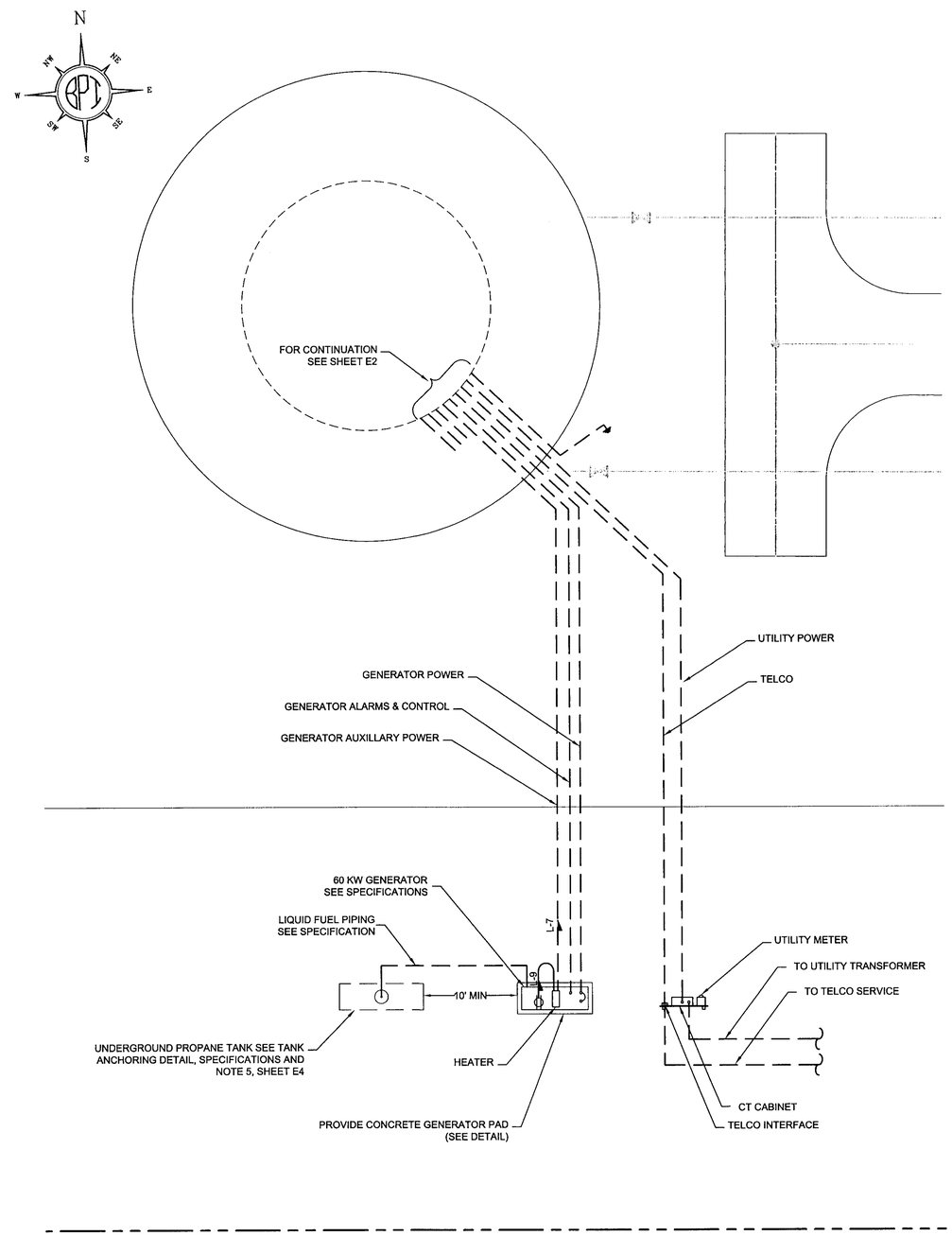

ELECTRICAL SITE PLAN

NTS

NO.	DATE	REVISION
1	2/16/07	REVISED PER BCOM COMMENT DTD 1/5/07

APPROVAL

Bury+Partners
ENGINEERING SOLUTIONS
4095 Ironbound Road, Suite 200
Williamsburg, Virginia 23188
Tel. (757) 229-1776 Fax (757) 229-4683

Bury+Partners, Inc. ©Copyright 2006

COMMONWEALTH OF VIRGINIA
R.A. Neisz
ROBERT ANDREW NEISZ, III
No. 10041
2/16/07
PROFESSIONAL ENGINEER

ELECTRICAL SITE PLAN

RICHARD BLAND COLLEGE CONSTRUCTION OF ELEVATED WATER STORAGE TANK

PRINCE GEORGE & DINWIDDIE COUNTY VIRGINIA

PLOTTING SCALE: NOT TO SCALE
DATE PLOTTED: 12/22/06
FILE: E1.DWG
DRAWN BY: BCH
DESIGNED BY: RAN
REVIEWED BY: RAN
PROJECT NO.: 21064

SHEET **E1** OF

I:\21064 - Richard Bland College\RBC Tanks\Sheets\Water\Storage Tank Drawings\E1.dwg