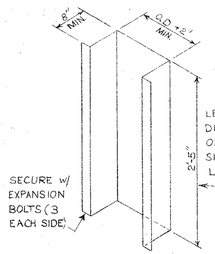

BAFFLE DETAIL
N.T.S.

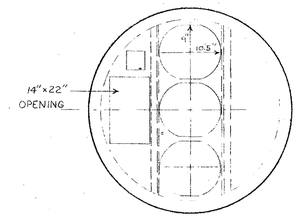

COVER DETAIL
N.T.S.

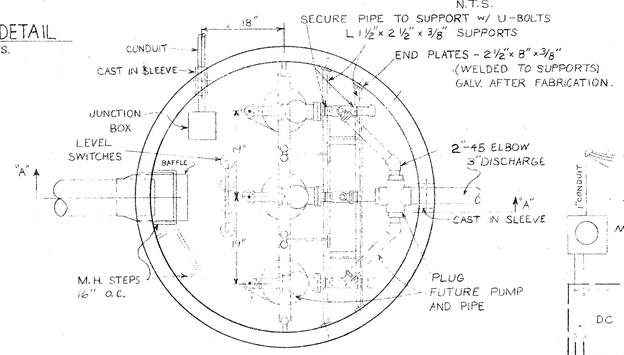

PUMP STATION DETAIL "TOP REMOVED"
N.T.S.

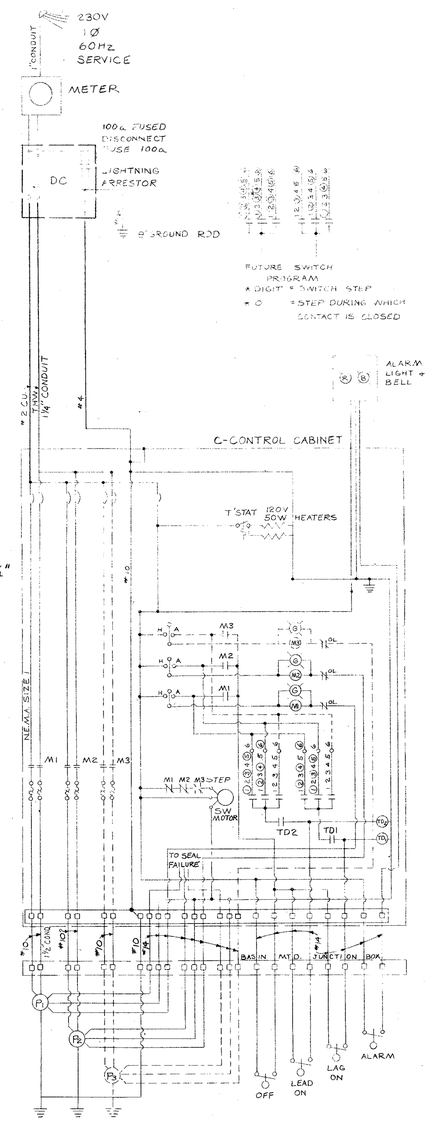

ELECTRICAL DIAGRAM
N.T.S.

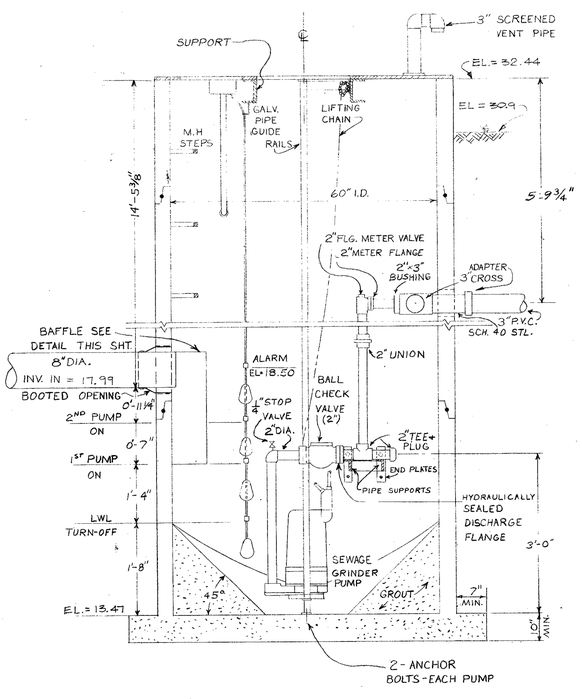

PUMP STATION-SECTION "A"
N.T.S.

NOTES:

1) Inital Pumping Conditions:
   Q=97gpm @ 38' TDH with 1 pump operating
   Q=140gpm @ 45' TDH with 2 pumps operating
   By changing impeller diameter, Pumping conditions can increase to:
   Q=138gpm @ 63' TDH with 1 pump operating
   Q=200gpm @ 76' TDH with 2 pumps operating
2) Six-inch service laterals with cleanouts located at property line shall be furnished and installed in accordance with Prince George County Standards.

EMERGENCY PUMP CONNECTION
N.T.S.

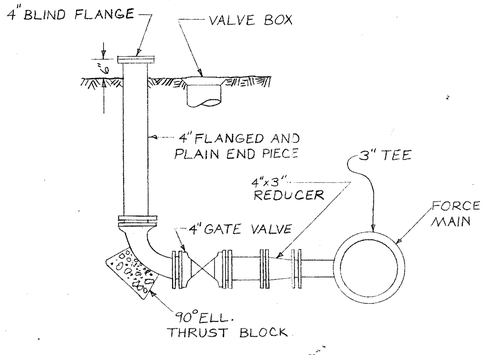

NOTE:
TO BE LOCATED ON FORCE MAIN WITHIN FIVE FEET OF PUMP BASIN.

GENERAL NOTES:

1. The location of existing utilites across or along the line of the proposed work are not necessarily shown on the plans & where shown are only approximately correct. The contractor shall on his own initiative & at no extra cost, locate all underground lines and structures as necessary. No claims for damages or extra compensation shall accure to the contractor from the presence of such pipes or other obstructions or from any delay due to removal or rearrangement of same. The contractor shall be responsible for any damage to underground structures.
2. The contractor shall notify all utility companies prior to starting work. The contractor shall be responsible for the location and protection of all utilities encountered during this work and shall cooperate fully with utility companies involved. Call before digging.

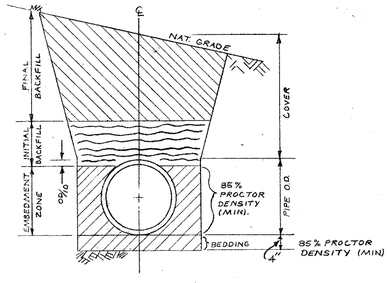

EMBEDMENT ZONES FOR FLEXIBLE AND SEMI-RIGID SEWER PIPE
N.T.S.

NOTE:
EMBEDMENT ZONE AND BEDDING MATERIALS SHALL BE CRUSHED ROCK, ASTM C33 SIZE 67 OR VDH+T SIZE 68.

CERTIFICATION

NO.	DATE	REVISIONS
1	10/13/86	ADDED EMBEDMENT DETAIL FOR FLEXIBLE PIPE

PUMP STATION AND MISCELLANEOUS DETAILS

PUDDLEDOCK ROAD SEWER SYSTEM
PRINCE GEORGE COUNTY, VIRGINIA

B & B Consultants, Inc.
CONSULTING ENGINEERS-SURVEYORS-LABORATORY ANALYSTS
CHASE CITY & SOUTH HILL, VIRGINIA

COMMISSION NO. E06086-853-D
DESIGNED BY H.M.B.
DRAWN BY F.R.J.
CHECKED BY H.M.B.
ISSUE DATE 8/12/86

SHEET NO. 6 OF 6 SHEETS