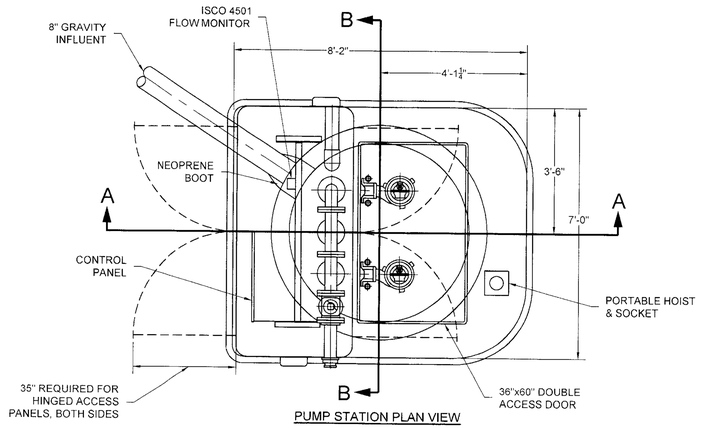

PUMP STATION PLAN VIEW

SCALE: 1/2"=1'-0"

NOTE:
PROPOSED LAYOUT. CONTRACTOR SHALL COORDINATE WITH MANUFACTURER FOR ACTUAL DIMENSIONS AND LAYOUT.

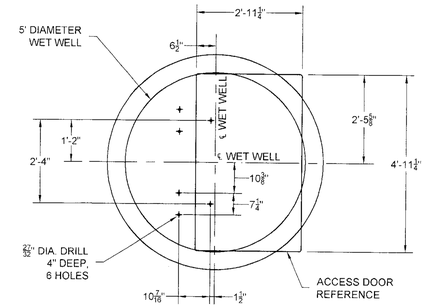

PUMP STATION HATCH LOCATION

SCALE: 1/2"=1'-0"

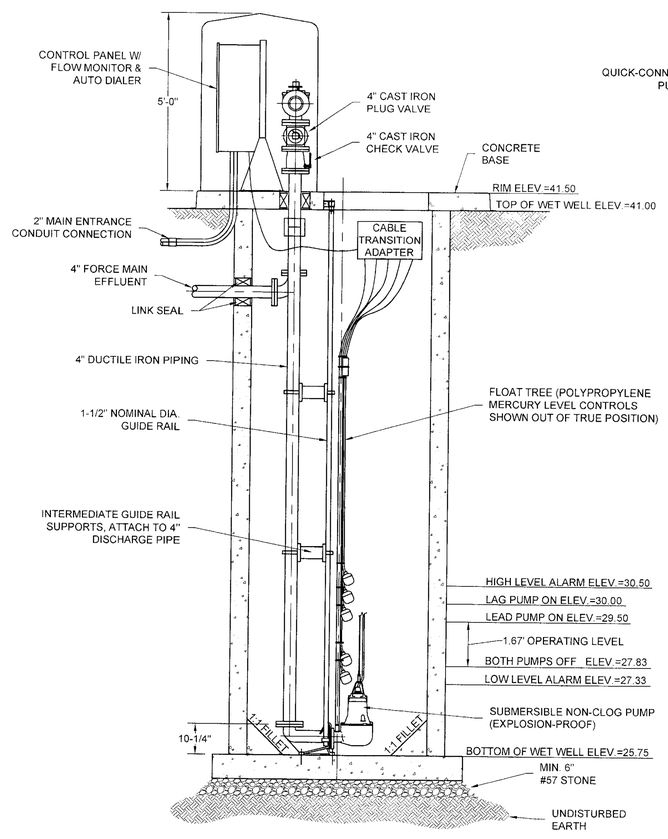

PUMP STATION ELEVATION
SECTION A-A

SCALE: 1/2"=1'-0"

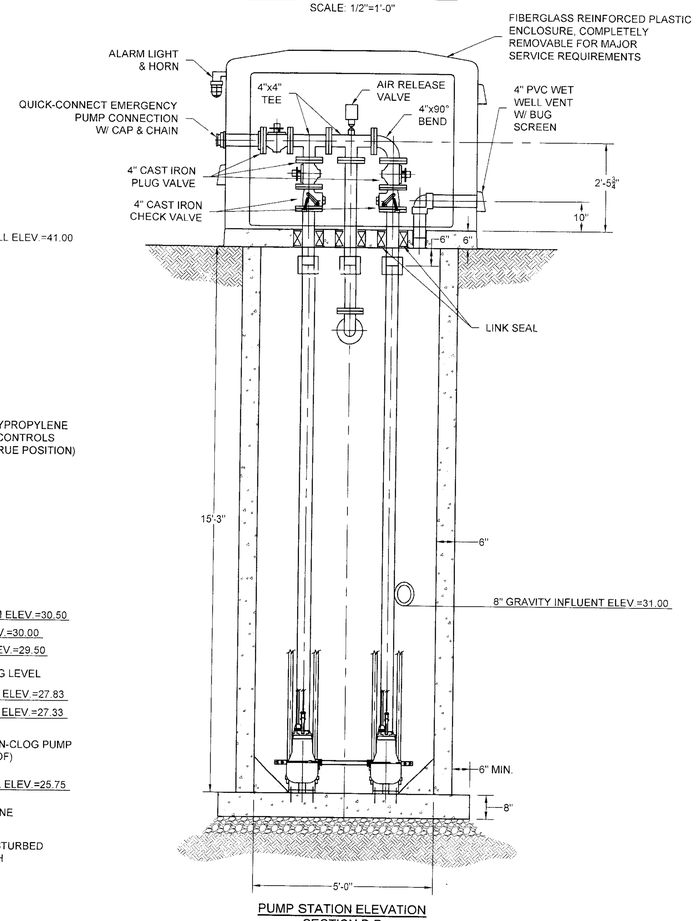

PUMP STATION ELEVATION
SECTION B-B

SCALE: 1/2"=1'-0"

COMMONWEALTH OF VIRGINIA
STUART LITTLE
Lic. No.039974
PROFESSIONAL ENGINEER

THIS DRAWING PREPARED AT THE
Corporate Headquarters
1001 Boulders Parkway | Richmond, VA 23225
TEL 804.200.6500 FAX 804.560.1016 www.timmons.com

YOUR VISION ACHIEVED THROUGH OURS.

Site Development | Residential | Infrastructure | Technology

REVISION DESCRIPTION	DATE
REVISED BASIS FOR FLOW CALCULATION	08/13/09

DATE	07/16/09
DRAWN BY	B.K.J.
DESIGNED BY	T.E.K.
CHECKED BY	S.G.L.
SCALE	AS SHOWN

TIMMONS GROUP.

PUDDLEDOCK PLACE PUMP STATION & FORCE MAIN

BLAND DISTRICT - PRINCE GEORGE COUNTY, VIRGINIA

PUMP STATION SITE PLAN

JOB NO.	27768
SHEET NO.	U1.1

These plans and associated documents are the exclusive property of TIMMONS GROUP and may not be reproduced in whole or in part and shall not be used for any purpose whatsoever, exclusive, but not limited to construction, staking and/or construction staking without the express written consent of TIMMONS GROUP.

I:\201\27768 - Puddledock Place PS\DWG\Sheet\C0\27768U-1.1-SECT.dwg | Plotted on 10/6/2009 11:00 AM | by Ben Jackson