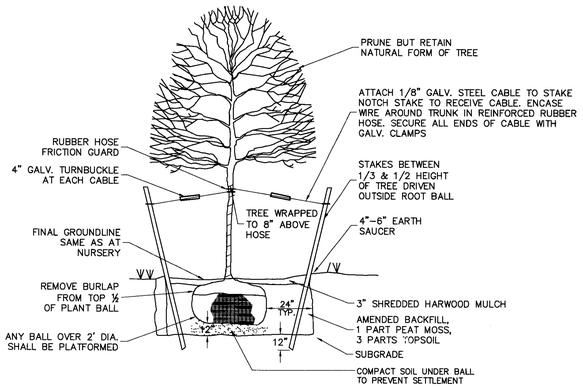

1 C-501 DECIDUOUS PLANTING & STAKING DETAIL
SCALE: N.T.S.

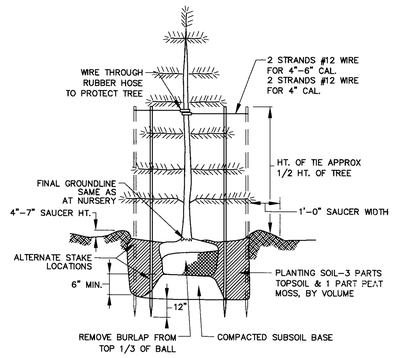

1 C-501 EVERGREEN TREE PLANTING & STAKING DETAIL
SCALE: N.T.S.

GENERAL LANDSCAPE PLANTING NOTES

1. THE CONTRACTOR SHALL SUPPLY PLANT MATERIALS IN QUANTITIES SUFFICIENT TO COMPLETE THE WORK SHOWN ON THE DRAWINGS. ANY POSITIVE QUANTITIES SHOWN ON THE PLANT LIST AND THOSE REQUIRED BY THE CONTRACT DRAWINGS SHALL NOT ENTITLE THE CONTRACTOR TO ADDITIONAL REMUNERATION.

2. THE CONTRACTOR SHALL VERIFY FINAL SELECTION OF PLANT MATERIALS WITH THE ENGINEER PRIOR TO INSTALLATION.

3. NO PLANT MATERIAL WILL BE ACCEPTED WHICH DISPLAYS MAJOR IRREGULARITIES OR MECHANICAL DAMAGE. THE ENGINEER RETAINS THE RIGHT TO REJECT ANY PLANT MATERIAL DEEMED UNFIT.

4. ALL AREAS OF THE SITE WHICH ARE DISTURBED AND NOT PLANTED, MULCHED, PAVED, ETC. SHALL BE TOPSOIL AND SEEDED OR SODDED. SEED MIXTURES TO BE APPLIED SHALL BE DETERMINED BY THE OWNER'S REPRESENTATIVE. TOPSOIL TO BE INSTALLED TO A MINIMUM 4" DEPTH.

5. SHREDDED BARK MULCH GROUND COVER SHALL BE APPLIED TO A MINIMUM 3" DEPTH.

6. WARRANTY;
   A. FOR A PERIOD OF TWELVE MONTHS FROM THE DATE THAT THE WORK UNDER THIS CONTRACT IS CERTIFIED AS COMPLETE, THE CONTRACTOR SHALL:
      1) WARRANT ALL PLANTS AND SEEDED AREAS UNDER THIS CONTRACT;
      2) REMOVE AND REPLACE DURING THIS WARRANTY PERIOD PLANTS WHICH DIE OR ARE IN A BADLY IMPAIRED CONDITION;
      3) REPLANT WITH STOCK OF SAME SIZE AND QUALITY AS ORIGINALLY SPECIFIED;
      4) GUY AND MAINTAIN AS SPECIFIED HEREIN AT NO ADDITIONAL COST TO THE OWNER. REPLACEMENTS MADE WITHIN SIX MONTHS AFTER THE BEGINNING OF THE WARRANTY PERIOD SHALL NOT EXTEND THE WARRANTY PERIOD OF THESE PARTICULAR PLANTS. THOSE REPLACEMENTS MADE SIX MONTHS OR MORE AFTER THE BEGINNING OF THE GUARANTEE PERIOD SHALL BE MAINTAINED AND WARRANTED FOR A PERIOD OF SIX MONTHS FROM THE TIME OF PLACEMENT.

7. OWNER TO VERIFY FLAGGED LOCATION OF TREES PRIOR TO INSTALLATION.

8. SHRUBS SHALL BE PLANTED WITH A MINIMUM OF 5 FEET OF SEPARATION FROM WATER AND SEWER UTILITIES. TREES SHALL BE PLANTED WITH A MINIMUM SEPARATION OF 10 FEET.

9. EXISTING PLANT MATERIAL THAT IS REMOVED AS A COMPONENT SHALL BE REPLACED BY THE CONTRACTOR. REFER TO THE LANDSCAPING PLAN AND PLANTING SCHEDULE FOR REQUIRED LANDSCAPE PLANTS.

10. ALL PLANT MATERIAL SHALL MEET THE MINIMUM STANDARDS OF THE AMERICAN STANDARD FOR NURSERY STOCK, PREPARED BY THE AMERICAN ASSOCIATION OF NURSERYMEN, LATEST EDITION.

11. PROPERTY OWNER IS RESPONSIBLE FOR THE INSTALLATION AND MAINTENANCE OF ALL LANDSCAPING MATERIALS FOR PERPETUITY.

12. MULCH ALL INTERIOR ISLANDS.

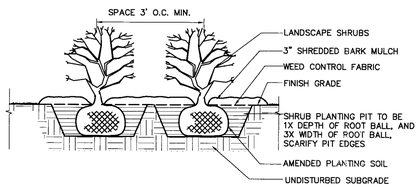

NOTE: DO NOT INSTALL MULCH AGAINST TRUNK OR STEMS.

2 C-501 SHRUB PLANTING DETAIL
SCALE: N.T.S.

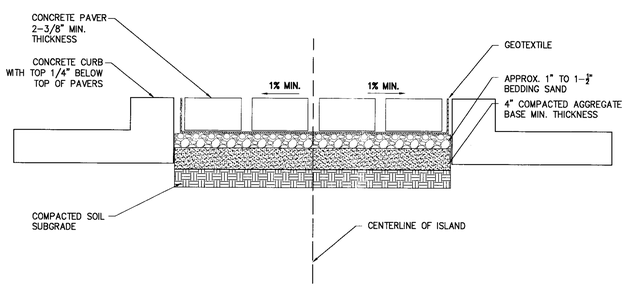

4 L-101 LANDSCAPE ISLAND PAVER DETAIL
SCALE: N.T.S.

PLANT LIST

KEY.	QTY.	LATIN NAME	COMMON NAME	CALIPER	HEIGHT	ROOT	COMMENTS
CANOPY TREES							
ZS	17	ZELKOVA SERRATA 'GREEN VASE'	'GREEN VASE' ZELKOVA	2-2 1/2"	12-14'	B&B	
BN	12	BETULA NIGRA	RIVER BIRCH	-	10-12"	B&B	3 CANES, MIN.
AP	8	ACER RUBRUM/'RED SUNSET'	'RED SUNSET' MAPLE	2-2 1/2"	12-14'	B&B	
UNDERSTORY TREES							
LN	10	LAGERSTROEMIA "NATCHEZ"	NATCHEZ CRAPEMYRTLE	-	8-10"	B&B	WHITE FLOWER/TREE FORM CLUMP
LS	13	LAGERSTROEMIA 'SIOUX'	SIOUX CRAPEMYRTLE	-	8-10"	B&B	REDISH PURPLE FALL COLOR
SHRUBS							
AA	75	ARONIA ARBUTIFOLIA 'BRILLIANTISIMA'	BRILLIANTISIMA ARONIA	-	3-4'	#3	6' O.C.
ALR	126	ABELIA GRAN. 'LITTLE RICHARD'	LITTLE RICHARD ABELIA	-	18-24"'	#3	3' O.C.
AEG	52	ABELIA GRAN. 'EDWARD GOUCHER'	EDWARD GOUCHER ABELIA	-	18-24"'	#3	4' O.C.
SJ	31	SPIRAEA JAPONICA 'NEON FLASH'	'NEON FLASH' SPIRAEA	-	15-18"'	#3	3' O.C.
LC	5	CRYPTOMERIA JAPONICA 'YOSHINO'	YOSHINO CRYPTOMERIA	-	7-8'	B&B	
CL	45	CUPRESSOCYPARIS LEYLANDII	LEYLAND CYPRESS	-	5-6'	#15	8' O.C.
	1600 SQ. FT.	ANNUALS	ANNUALS	-	-	-	MIXED VARIETY @ 12" O.C.

REVISIONS
◇ PRE-BID SET ISSUE DATE △ POST BID SET ISSUE DATE

DATE		DESCRIPTION
12-14-07	◇	County Comments
01-24-08	◇	VDOT Comments
02-27-08	◇	County Comments

COMMONWEALTH OF VIRGINIA
DAVID K. HARBOUR
LIC. NO. 31636
PROFESSIONAL ENGINEER

CLOUGH HARBOUR & ASSOCIATES LLP
10900 Midlothian Turnpike, The Winchester Building, Suite 303 - Richmond, VA 23235-4700
Main: (804) 897-3564 - www.coughharbour.com

LOWE'S HOME CENTERS, INC.
P.O. BOX 1111
N. WILKESBORO, NC 28656
336.658.4000 (V) 336.658.3257 (F)

THIS DRAWING IS THE PROPERTY OF LOWE'S HOME CENTERS, INC. ANY USE OR REPRODUCTION IN WHOLE OR PART IS PROHIBITED WITHOUT THE EXPRESSED WRITTEN CONSENT OF LOWE'S HOME CENTERS, INC. COPYRIGHT 2004 ALL RIGHTS RESERVED

LANDSCAPE PLAN DETAILS
LOWE'S OF PRINCE GEORGE, VA
117 K SUPER WIDE
PRINCE GEORGE, VA
PROJECT No: 16984 | DRAWN BY: KAW | CHECKED BY: ISH

ORIGINAL ISSUE DATE: 11-05-07
PERMIT SET ISSUE DATE: 12-14-07
CONSTRUCTION SET ISSUE DATE:
DRAWING NUMBER:
L-101

File: N:\16984\CADD\V6-40\01-DESIGN PLANS\100-PERCENT\16984_L-101.DWG
Saved: 2/27/2008 1:03:05 PM Plotted: 3/10/2008 2:49:09 PM User: Marx, Daniel