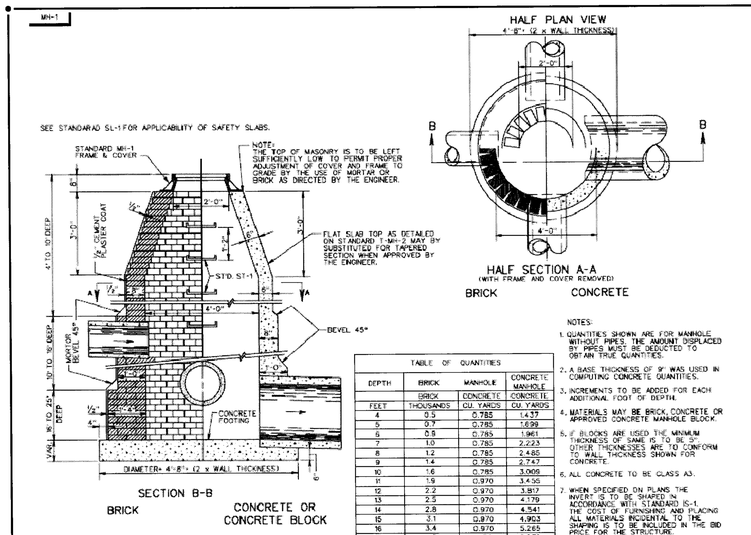

NOTES:

1. QUANTITIES SHOWN ARE FOR MANHOLE WITHOUT PIPES. THE AMOUNT DISPLACED BY PIPES MUST BE DEDUCTED TO OBTAIN TRUE QUANTITIES.
2. A BASE THICKNESS OF 9" WAS USED IN COMPUTING CONCRETE QUANTITIES.
3. INCREMENTS TO BE ADDED FOR EACH ADDITIONAL FOOT OF DEPTH.
4. MATERIALS MAY BE BRICK, CONCRETE OR APPROVED CONCRETE MANHOLE BLOCK.
5. IF BLOCKS ARE USED THE MINIMUM THICKNESS OF SAME IS TO BE 9". OTHER THICKNESSES ARE TO CONFORM TO WALL THICKNESS SHOWN FOR CONCRETE.
6. ALL CONCRETE TO BE CLASS A3.
7. WHEN SPECIFIED ON PLANS THE INVERT IS TO BE SHAPED IN ACCORDANCE WITH STANDARD IS-1. THE COST OF FURNISHING AND PLACING ALL MATERIALS INCIDENTAL TO THE SHAPING IS TO BE INCLUDED IN THE BID PRICE FOR THE STRUCTURE.

TABLE OF QUANTITIES

DEPTH	BRICK	MANHOLE	CONCRETE MANHOLE
	BRICK	CONCRETE	CONCRETE
FEET	THOUSANDS	CU. YARDS	CU. YARDS
4	0.5	0.785	1.437
5	0.7	0.785	1.699
6	0.9	0.785	1.961
7	1.0	0.785	2.223
8	1.2	0.785	2.485
9	1.4	0.785	2.747
10	1.6	0.785	3.009
11	1.9	0.970	3.456
12	2.2	0.970	3.817
13	2.5	0.970	4.179
14	2.8	0.970	4.541
15	3.1	0.970	4.903
16	3.4	0.970	5.265
17	4.0	1.173	6.032
INCREMENT	0.45	-	0.582

SHEET 1 OF 5

1 MANHOLE FOR 12"–48" PIPE CULVERTS

SCALE: N.T.S.

MH 1

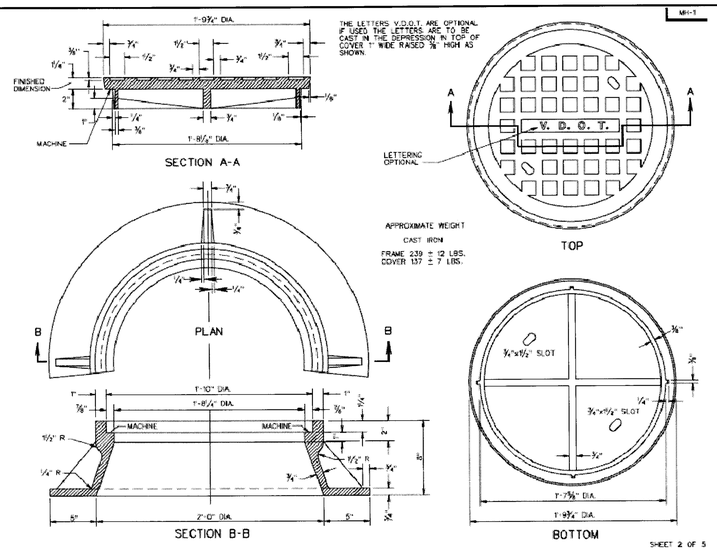

SHEET 2 OF 5

2 STANDARD MANHOLE FRAME & COVER

SCALE: N.T.S.

MH 1

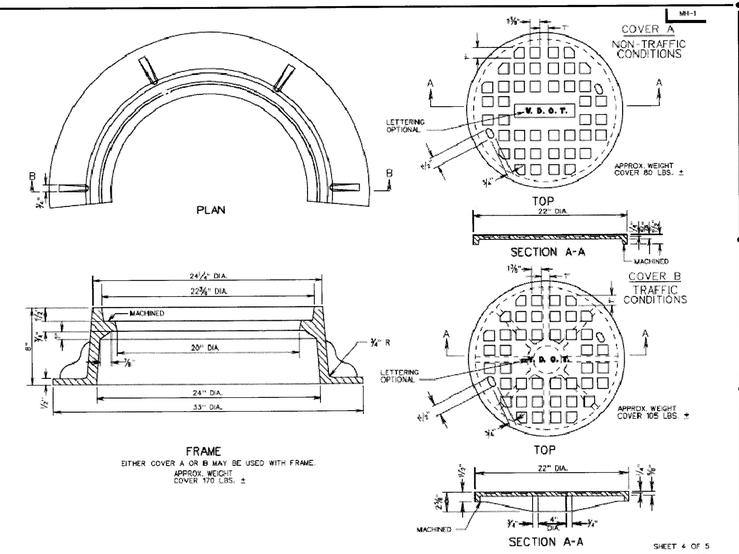

SHEET 4 OF 5

3 STANDARD MANHOLE FRAME & COVER

SCALE: N.T.S.

MH 1

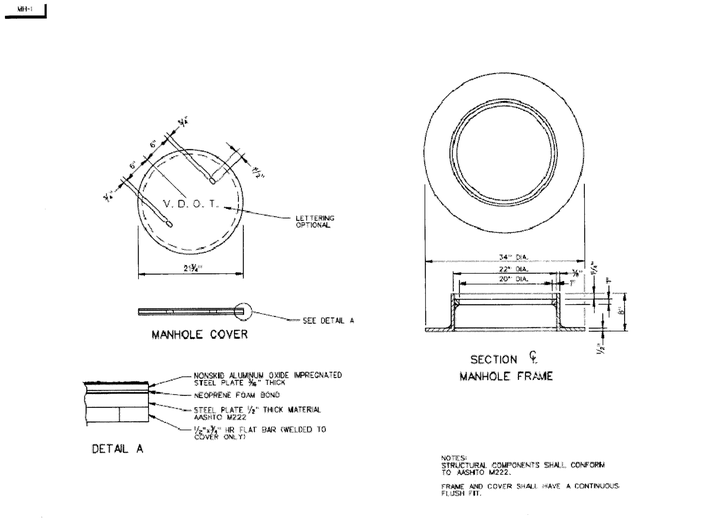

SHEET 5 OF 5

3 STANDARD MANHOLE FRAME & COVER

SCALE: N.T.S.

MH 1

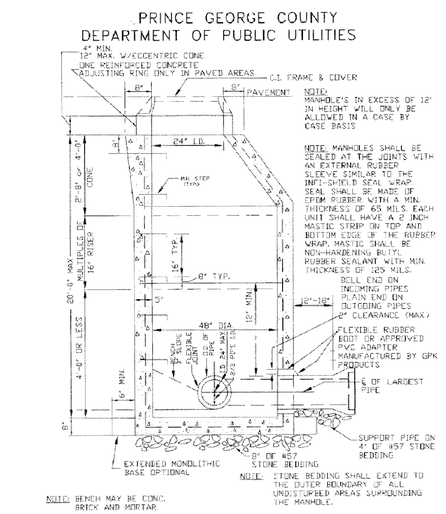

5 STANDARD PRECAST CONCRETE MANHOLE DETAIL

SCALE: N.T.S.

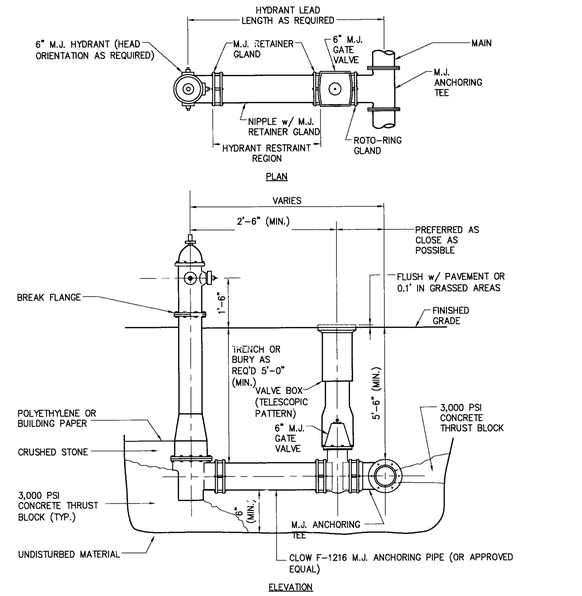

6 HYDRANT & VALVE ASSEMBLY INSTALLATION DETAIL

SCALE: N.T.S.

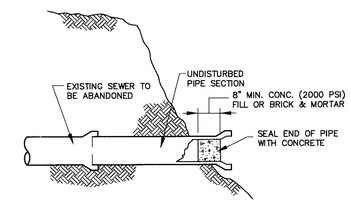

7 PLUG EXISTING SEWER DETAIL

SCALE: N.T.S.

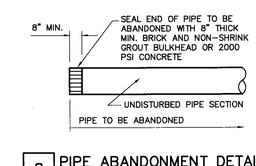

8 PIPE ABANDONMENT DETAIL

SCALE: N.T.S.

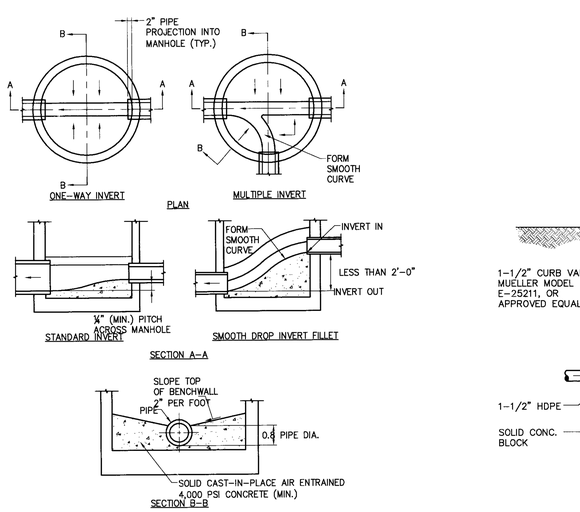

9 SANITARY MANHOLE INVERTS, CHANNEL & BENCHWALL

SCALE: N.T.S.

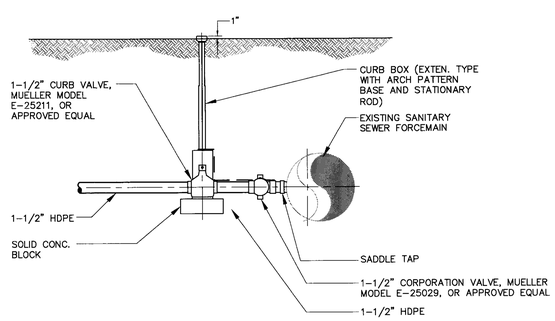

10 CONNNECTION TO EXISTING SANITARY SEWER FORCEMAIN DETAIL

SCALE: N.T.S.

REQUIRED BEARING AREAS & DIMENSIONS FOR CONCRETE THRUST BLOCKS

PIPE SIZE (IN.)	TEE (SEE NOTE 5)		90° (1/4) BEND		45° (1/8) BEND		22½ (1/16) BEND		11¼ (1/32) BEND	
	AREA (SQ.FT.)	DIMENSION D x L	AREA (SQ.FT.)	DIMEN. D x L	AREA (SQ.FT.)	DIMEN. D x L	AREA (SQ.FT.)	DIMEN. D x L	AREA (SQ.FT.)	DIMEN. D x L
3 & 4	1.4	1.0 x 1.5	2.0	1.0 x 2.0	1.1	1.0 x 1.5	0.6	0.5 x 1.5	0.3	0.5 x 1.0
6	3.2	1.5 x 2.5	4.5	2.0 x 2.5	2.4	1.5 x 2.0	1.2	1.0 x 1.5	0.6	1.5 x 1.5
8	5.7	2.0 x 3.0	8.0	2.0 x 4.0	4.3	2.0 x 2.5	2.2	1.5 x 1.5	1.1	1.0 x 1.5
12	12.7	3.5 x 3.5	18.0	4.0 x 4.5	9.7	2.5 x 4.0	5.0	2.0 x 2.5	2.5	1.5 x 2.0
14	24.6	6.0 x 4.5	24.6	6.0 x 4.5	13.3	3.5 x 4.0	6.8	2.0 x 3.5	3.4	1.5 x 2.5
16	50.0	6.0 x 8.5	50.0	6.0 x 8.5	27.0	5.0 x 5.5	13.8	3.5 x 4.0	6.9	2.5 x 3.0
24	72.0	8.0 x 9.0	72.0	8.0 x 9.0	39.0	5.0 x 8.0	20.0	4.0 x 5.0	10.0	3.0 x 3.5

THRUST BLOCK NOTES:

1. FOR REQUIRED BEARING AREA DIMENSIONS D & L, SEE TABLE. DIMENSIONS OF D & L OTHER THAN THOSE SHOWN IN THE TABLE MAY BE USED PROVIDED THEY YIELD A BEARING AREA EQUAL TO OR LARGER THAN THAT REQUIRED.
2. CONCRETE NOT TO OVERLAP ANY JOINT.
3. CONCRETE TO BE PLACED SO AS NOT TO INTERFERE WITH REMOVING OR INSTALLING ANY OF THE JOINTING HARDWARE.
4. APPROXIMATE VOLUME OF CONCRETE THRUST BLOCK:

$$V = \frac{LD\,(W + ID) - ID}{81}$$

WHERE:
V = VOLUME IN CUBIC YARDS
L = LENGTH OF BLOCK IN FEET
D = DEPTH OF BLOCK IN FEET
W = WIDTH OF BLOCK IN FEET
ID = INSIDE DIAMETER OF PIPE IN FEET

5. VALUES FOR TEE ALSO APPLY TO END PLUGS, CAPS AND TAPPING SLEEVES.
6. REQUIRED BEARING AREAS ARE DUE TO THRUSTS CAUSED BY 150 PSI WORKING PRESSURE PLUS 50% (75 PSI) SURGE ALLOWANCE RESULTING IN 225 PSI TOTAL INTERNAL PRESSURE. NORMAL PIPE DIAMETER USED.
7. REQUIRED BEARING AREAS ARE BASED ON ALLOWABLE SOIL BEARING CAPACITY OF 2,000 LBS/SQUARE FOOT FOR SAND. DUE TO OTHER SOIL CONDITIONS ENCOUNTERED, BEARING AREAS MAY BE MODIFIED BY THE ENGINEER.
8. IN MUCK, PEAT, OR RECENTLY PLACED FILL, ALL THRUST SHALL BY RESISTED BY PILES OR TIE RODS TO SOLID FOUNDATIONS, OR BY REMOVAL OF SUCH UNSTABLE MATERIAL AND REPLACEMENT WITH BALLAST OF SUFFICIENT STABILITY TO RESIST THE THRUSTS, ALL AS REQUIRED BY THE ENGINEER.

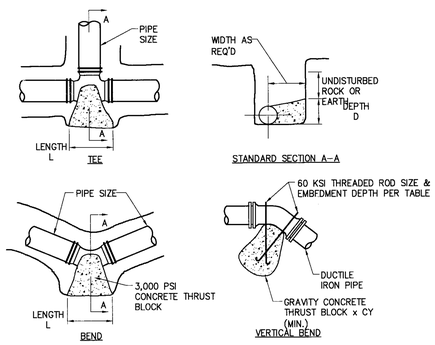

11 THRUST BLOCK DETAILS

SCALE: N.T.S.

TYPE A BLOCKING FOR 11¼° & 22½° VERTICAL BENDS

PIPE SIZE (NOM. DIA. IN.)	VERTICAL BEND (DEGREES)	NO. OF CU.FT. OF CONC. BLOCKING (CUBIC FEET)		DIA. OF SHACKLE RODS (2)* (IN.)	DEPTH OF RODS IN CONC. (FT.)
4"	11 1/4°	8	2.0	3/4"	1.6
	22 1/2°	16	2.5		
6"	11 1/4°	16	2.5	3/4"	1.6
	22 1/2°	32	3.2		
8"	11 1/4°	28	3.0	3/4"	1.6
	22 1/2°	55	3.8		
10"	11 1/4°	42	3.5	3/4"	1.6
	22 1/2°	83	4.4		
12"	11 1/4°	60	3.9	3/4"	1.6
	22 1/2°	118	4.9	7/8"	2.2
14"	11 1/4°	81	4.3	7/8"	2.2
	22 1/2°	158	5.4		
16"	11 1/4°	104	4.7	7/8"	2.2
	22 1/2°	205	5.9	1 1/8"	3.7
18"	11 1/4°	131	5.1	7/8"	2.2
	22 1/2°	257	6.4	1 1/8"	3.7
20"	11 1/4°	161	5.4	7/8"	2.2
	22 1/2°	316	6.8	1 1/4"	4.6
24"	11 1/4°	229	6.1	1"	2.9
	22 1/2°	450	7.7	1 3/8"	5.7

TYPE B BLOCKING FOR 45° VERTICAL BENDS

PIPE SIZE (NOM. DIA. IN.)	NO. OF CU.FT. OF CONC. BLOCKING (CUBIC FEET)		DIA. OF SHACKLE RODS (2)* (IN.)	DEPTH OF RODS IN CONC. (FT.)
4"	29	3.1	3/4"	1.6
6"	59	3.9		
8"	102	4.7		
10"	154	5.4		
12"	218	6.0		
14"	292	6.6	7/8"	2.2
16"	378	7.2	1 1/8"	3.7
18"	478	7.8		
20"	583	8.3	1 1/4"	4.6
24"	832	9.4	1 3/8"	5.7

REVISIONS

◇ PRE BID SET ISSUE DATE △ POST BID SET ISSUE DATE

DATE	DESCRIPTION
12-14-07 ◇	County Comments
01-24-08 ◇	VDOT Comments
02-26-08 △	VDOT Comments

COMMONWEALTH OF VIRGINIA
DAVID W. HARBOUR
LIC. NO. 31656
PROFESSIONAL ENGINEER

CLOUGH HARBOUR & ASSOCIATES LLP
10800 Midlothian Turnpike, Water Master Building, Suite 303 · Richmond, VA 23235-4700
Main: (804) 897-3564 · www.cloughharbour.com

LOWE'S HOME CENTERS, INC.
P.O. BOX 1111
N. WILKESBORO, NC 28656
336.658.4000 (V) 336.658.3257 (F)

THIS DRAWING IS THE PROPERTY OF LOWE'S HOME CENTERS, INC. USE OR REPRODUCTION IN WHOLE OR PART IS PROHIBITED WITHOUT THE EXPRESSED WRITTEN CONSENT OF LOWE'S HOME CENTERS, INC. COPYRIGHT 2004 ALL RIGHTS RESERVED

SITE DETAILS
LOWE'S OF PRINCE GEORGE, VA
117 K SUPER WIDE
PRINCE GEORGE, VA
PROJECT No: 16984 DRAWN BY: AAW CHECKED BY: SH

ORIGINAL ISSUE DATE: 11-05-07
PERMIT SET ISSUE DATE: 12-14-07
CONSTRUCTION SET ISSUE DATE:
DRAWING NUMBER:
C-112