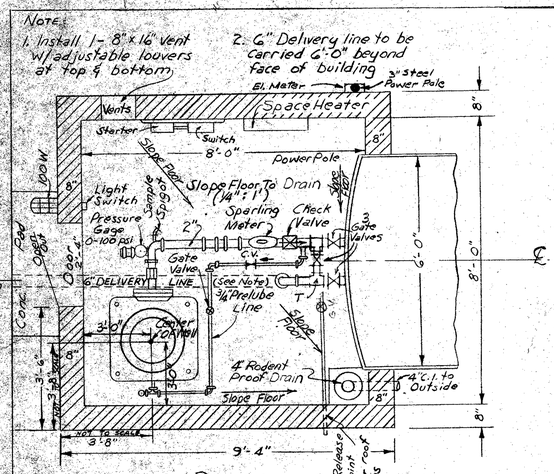

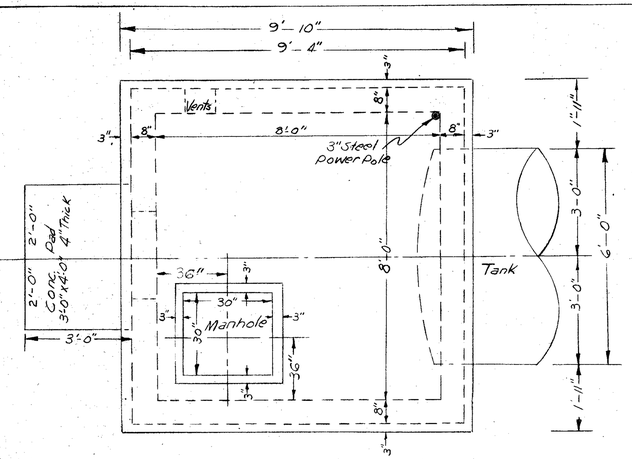

ROOF DIAGRAM
1/2" = 1'-0"

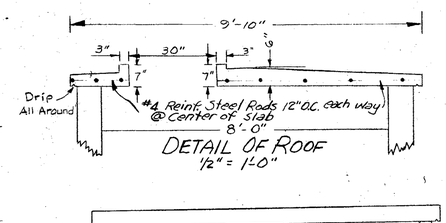

DETAIL OF ROOF
1/2" = 1'-0"

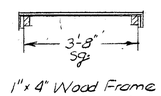

1"x 4" Wood Frame
6# Roof Sheeting
Cover with 30# Tin, Flat lock/solder, Paint.

A. The contractor shall drill well to produce (after a 24 hour test) a minimum output of 30 gpm furnish and install steel well casing and all accessorys. All workmanship and materials to meet the standards of the Va. State Dept. of Health and the Engineer. The Contractor to be responsible for all permits, sterilization tests, submitting samples to Va. State Dept. Health, etc.

B. Install one vertical water lubricated turbine pump and all accessorys necessary to produce a minimum output of 30 gpm.

C. One complete set of pump house hydraulics, including 2" discharge fittings from well pump to pressure tank, 2" propeller type master meter with speedometer dial and sweep hand, sample spigot for sanitary samples, prelubrication line, air feeding device, pump off connection for testing well, including installation labor.

D. One 5,000 gallon, 72" diameter by 24' overall, black steel hydropneumatic pressure tank. 100 lb. working pressure tested. 150 lbs., including delivering. Tank fittings, piping, air release, switches, 4" outlet valve, delivered and installed.

E. Complete electrical work inside of pump house including 100 amp. hand switch, size 1 starter, installation of trigistat and heater, electric lights, hand-off automatic controls.

F. One 8'x8' inside dimension concrete block pump house, including reinforced concrete roof, concrete slab floor, access manhole, metal covered door, ventilators.

G. One 2000 watt, 115 volt G.E. Electric floor mounted space heater, with thermostat (cat. # 2A-378 G-1) or approved equal, to be installed in pump house.

H. Painting - Pump House walls to be painted inside and outside with 2 coats Ramuc Utility undercoater plus 1 coat of Ramuc Utility Enamel by Inertol Co (Now Koppers Co.)
Water Tank to be shop primed with one coat of Inertol Rustinhibitive Primer #621. Finish exposed surfaces with two coats of Olive Green #323 Glamortex Enamel as sold by Inertol Co. (Now Koppers Co.)
All exposed piping and fittings inside Pump House to be painted with two coats of ~~Black~~ White Enamel.

I. All equipment and materials used on this project shall be approved by the Engineer.

NOTE:
Contractor shall perform a continious 24 hour production test on the well with log and certification acceptable to Va. Dept. of Health.

GUARANTEE PERIOD:
After completion and acceptance of this project, the Contractor will visit or come on call and assure satisfactory operation for a period of three hundred and sixty-five (365) days from date of final exceptence by the Owners and Engineer.

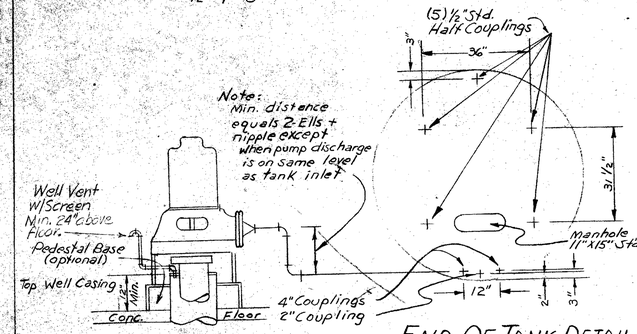

END OF TANK DETAIL
1/2" = 1'-0"

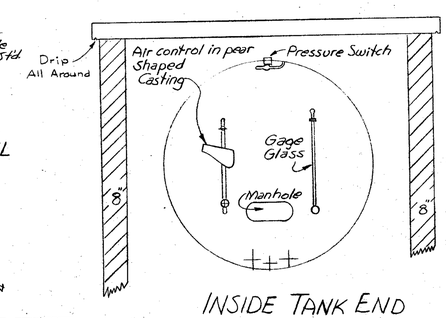

INSIDE TANK END

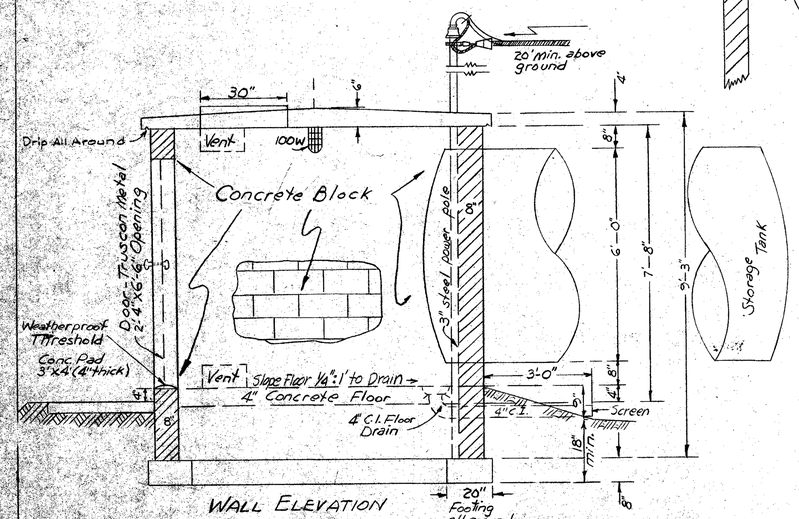

WALL ELEVATION
1/2" = 1'-0"

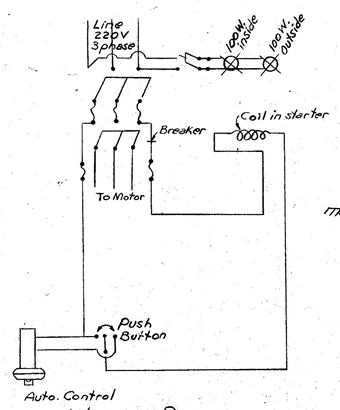

WIRING DIAGRAM

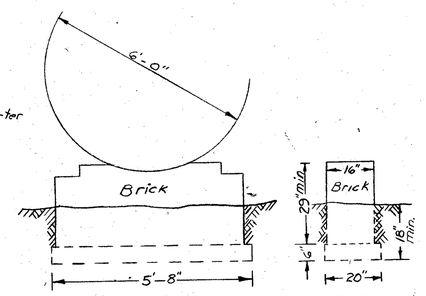

SIDE & END VIEWS OF PIERS
1/2" = 1'-0"

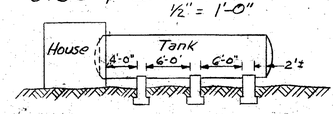

PIER LOCATION

APPROVED FOR CONSTRUCTION
3 NOV. 71

COMMONWEALTH OF VIRGINIA
CARL A. WATKINS, JR.
CIVIL ENGINEER
CERTIFICATE No. 1285
CERTIFIED PROFESSIONAL ENGINEER

CONTRACT No.

LA PRADE BROS. CIVIL ENGINEERS RICHMOND, VA.

COUNTY OF PRINCE GEORGE, VIRGINIA
WATER IMPROVEMENTS

PRINCE GEORGE WOODS ESTATES
SECTION - 1

DATE: 9 Sept. 71	REVISIONS	DRAWING No.
SCALE: AS SHOWN	22 OCT. 71 CAW	2 OF 2
DESIGN: CAW		
DRAWN: CAW		
CHECKED:		