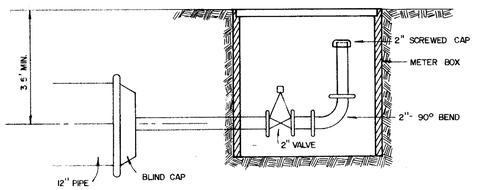

DETAIL 2" BLOW OFF

NO SCALE

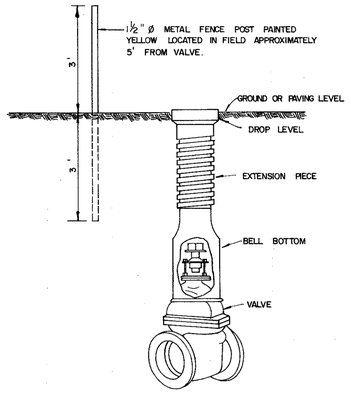

TYPICAL VALVE & VALVE BOX

NO SCALE

MINIMUM CONTACT AREA IN SQ. FEET FOR THRUST BLOCKING 150 P.S.I. & 2000 LB. SQUARE FOOT BEARING					
PIPE SIZE	TEE	90° BEND	45° BEND	22½° BEND	
8"	5 sq. ft.	7.5 sq. ft.	4 sq. ft.	2 sq. ft.	
12"	11.5 sq. ft.	16 sq. ft.	9 sq. ft.	4.5 sq. ft.	

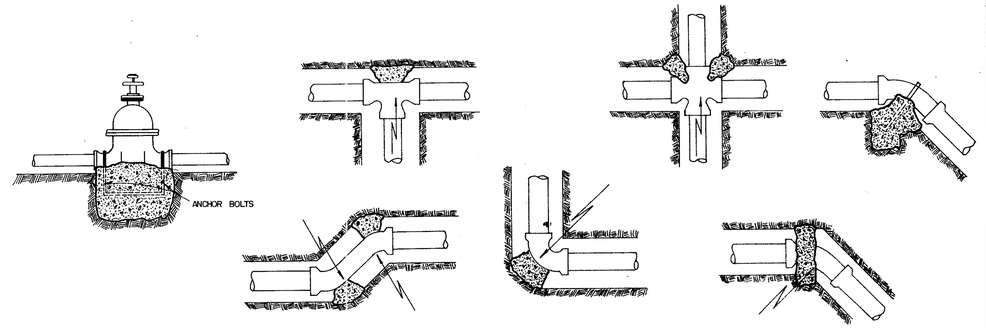

TYPICAL THRUST BLOCKING DETAILS

NO SCALE

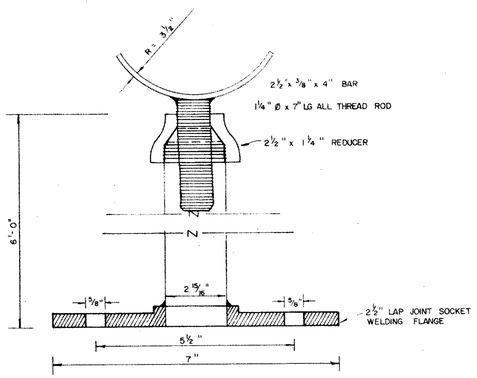

DETAIL 6" OVERHEAD PIPE STANCHION

NO SCALE

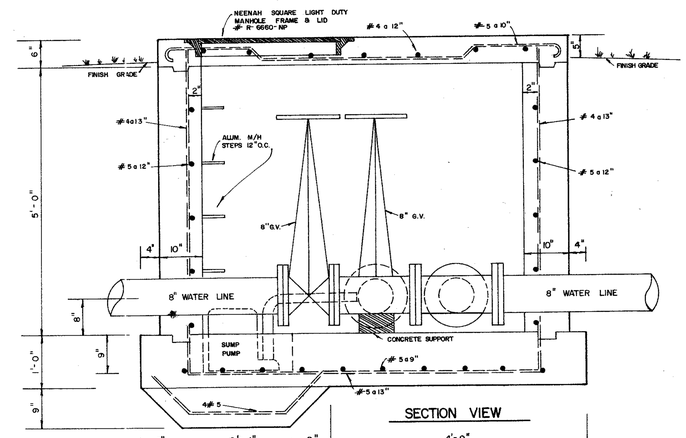

PLAN & SECTION VIEW OF THE VALVE PIT

¾" = 1'-0"

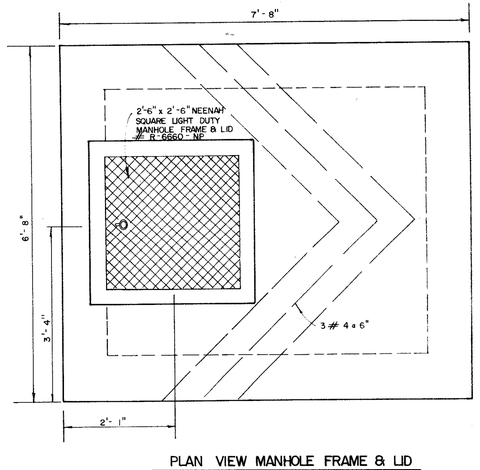

PLAN VIEW MANHOLE FRAME & LID

SCALE ¾" = 1'-0"

CHARLES C. TOWNES & ASSOCIATES
Engineers, Planners, Land Surveyors
110 Norfolk Ave., P.O. Box 97
Colonial Heights, Va. 23834
804-526-6766

COMMONWEALTH OF VIRGINIA
CHARLES E. TOWNES
CERTIFICATE NO. # 10478
PROFESSIONAL ENGINEER

PRINCE GEORGE INDUSTRIAL WATER PROJECT

DISTRICT
RIVES
PRINCE GEORGE COUNTY, VIRGINIA

VALVE PIT & TYPICAL DETAILS

REVISIONS	
DATE	ITEM

DATE
MAY 26, 1982

SCALE
AS SHOWN

DRAWN BY
JDJ

CHECKED BY

F.B. #

SHEET #
7