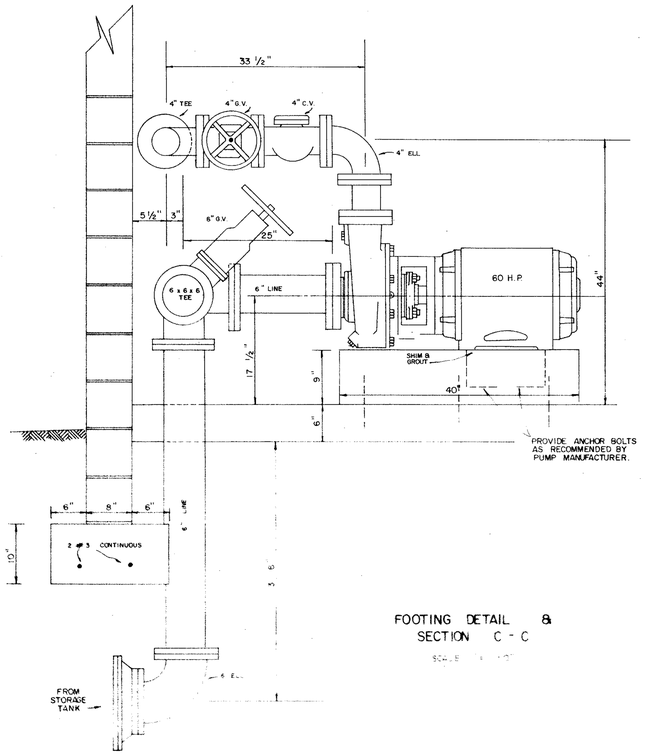

FOOTING DETAIL & SECTION C - C

SCALE: 1/4" = 1'-0"

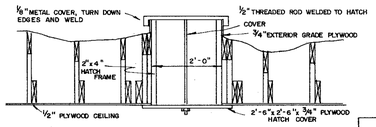

WELL ROOF HATCH DETAIL

SCALE: 1/2" = 1'-0"

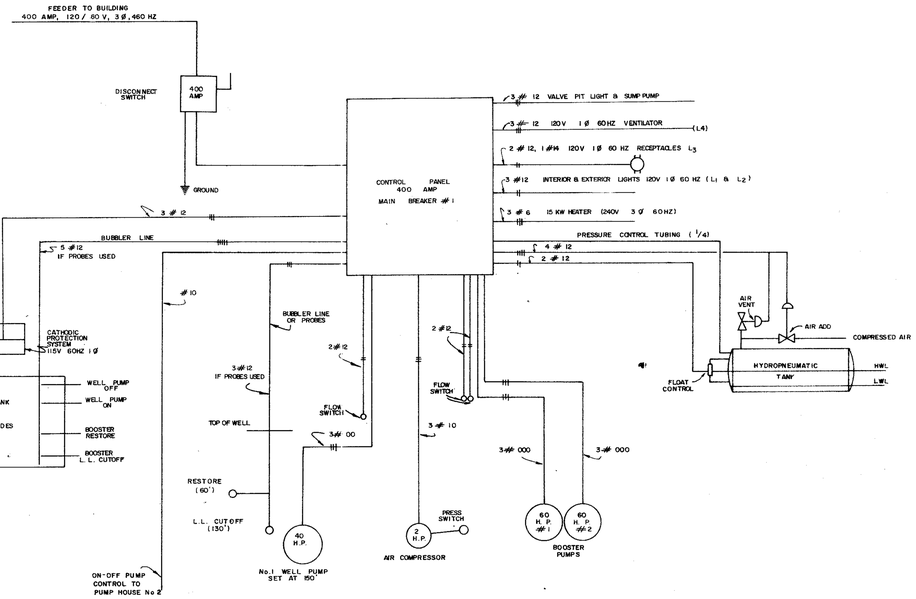

ELECTRICAL SCHEMATIC
PUMP HOUSE NO. 1

NO SCALE

1. ALL EQUIPMENT SHALL BE GROUNDED ACCORDING TO THE NATIONAL ELECTRIC CODE.
2. THE LOCATION OF LIGHT FIXTURES MAY BE REASONABLY MOVED TO ACCOMODATE INSTALLATION.
3. ALL INSTALLATIONS SHALL CONFORM TO THE NATIONAL ELECTRIC CODE AND APPLICABLE TO LOCAL CODES.
4. CONDUIT RUNS ARE SHOWN IN GENERAL. THE DRAWINGS ARE DIAGRAMMATIC ONLY, EXCEPT WHERE SPECIFICALLY DIMENSIONED ALL WORK SHALL BE ACCURATELY LAID OUT IN COOPERATION WITH OTHER TRADES TO AVOID CONFLICTS AND MAINTAIN MAXIMUM ACCESSIBILITY AND HEADROOM.

1. LEVEL IN WATER STORAGE TANK CONTROLS THE SUBMERSIBLE WELL PUMPS (NO. 1 & NO. 2) TO MAINTAIN LIQUID LEVEL IN STORAGE TANK. WELL PUMP NO. 2 CONTROLLED VIA REMOTE WIRING FROM PUMP HOUSE NO. 1.
2. WELL PUMP NO. 1 HAS LOW LEVEL CUT-OFF AND RESTORE BUBBLERS OR PROBES WHICH WILL PREVENT WELL PUMP OPERATION IF DRAWDOWN FALLS TO 130' DEPTH. NO. 1 PUMP RESTORE IS SET AT 60'. WELL PUMP NO. 2 HAS LOW LEVEL CUT-OFF AND RESTORE PROBES WHICH WILL PREVENT WELL PUMP OPERATION IF DRAWDOWN FALLS TO 115' DEPTH. NO. 2 PUMP RESTORE IS SET AT 65'.
3. ALL PROBES ARE TO HAVE SOLID ROD ELECTRODES.

1. BOOSTER PUMP OPERATION IS CONTROLLED BY LEVEL AND PRESSURE IN THE HYDROPNEUMATIC TANK. THE FLOAT SWITCH STOPS THE PUMP AT HIGH WATER LEVEL. THE PRESSURE SWITCH ADDS AIR TO RESTORE THE SYSTEM PRESSURE TO 100 P.S.I.G.
2. BOOSTER PUMP START-STOP IS AUTOMATICALLY ALTERNATED EACH PUMP CYCLE. BOTH BOOSTER PUMPS WILL OPERATE IF SYSTEM PRESSURE FALLS BELOW 70 P.S.I.G.
3. THE PRESSURE SWITCH ON RECEIVER WILL CONTROL THE COMPRESSOR OPERATION.
4. BOOSTER PUMP OPERATION WILL BE CONTROLLED BY LOW LEVEL PROBES IN THE WATER STORAGE TANK WHICH WILL CUT OFF AND RESTORE BOOSTER PUMPS.

1,000,000 GALLON CAPACITY STORAGE TANK

1. ROOF TYPE - SELF-SUPPORTING DOME OR UMBRELLA ROOF
2. 1/4" MINIMUM, LAPWELDED BOTTOM PLATE
3. 3/16" MINIMUM ROOF THICKNESS FOR AREAS NOT IN CONTACT WITH WATER
4. NO CORROSION ALLOWANCE FOR PARTS IN CONTACT WITH WATER
5. APPURTENANCES - SEE PLAN FOR ORIENTATION:
   A. PROVIDE TWO 24" CIRCULAR SHELL MANHOLES WITH DAVIT
   B. PROVIDE A 24" SQUARE ROOF HATCH WITH 4" CURB, HINGES AND LOCKING HASP
   C. PROVIDE A VENTILATING FINIAL WITH STAINLESS STEEL INSECT SCREEN. THE VENT SHALL BE DESIGNED TO PROVIDE A MINIMUM OF 72 SQUARE INCHES OF FREE VENT AREA. THE OVERFLOW PIPE SHALL NOT BE CONSIDERED A TANK VENT.
   D. A TANK LADDER EXTENDING OVER THE ROOF SECTION TO THE FINIAL VENT SHALL BE PROVIDED ON THE OUTSIDE OF THE TANK. STRINGERS OF THE LADDER SHALL BE NOT LESS THAN 2"x1/4" AND RUNGS NOT LESS THAN 3/4" ROUND BARS. THE LADDER BOTTOM SHALL BE 12 FEET FROM THE BOTTOM OF THE TANK. THE VERTICAL SECTION OF THE LADDER SHALL BE PROVIDED WITH A STANDARD SAFT-NOTCH CLIMBING RAIL COMPLETE WITH SLEEVE AND BOLT
6. SAND PAD NOTES:
   A. SAND MUST BE CLEAN AND FREE FROM CORROSIVE ELEMENTS
   B. APPLY ONLY SUFFICIENT "ACID FREE" FUEL OIL TO THE SAND TO HIGHLY WET SAND BY 1. MIXING IN A CONCRETE MIXER 2. WATERING BY SPRADER OR HAND
   C. INSTALL SAND PAD JUST PRIOR TO TANK ARRIVAL AS DIRECTED BY ENGINEER
   D. QUANTITY OF SAND REQUIRED IS APPROXIMATELY 10 CU. YDS
   E. GROWN SAND AT CENTER OF TANK
   F. ALLOW 2 GALL. OF FUEL OIL PER CU. YD. OF SAND
7. GROUTING NOTES:
   A. GROUT TO BE INSTALLED BY TANK CONTRACTOR AFTER TANK IS ERECTED AND FILLED WITH WATER
   B. GROUT TO BE "BLUE STAR" GROUT
8. RING WALL NOTES:
   A. TOP SURFACE OF RING WALL MUST BE LEVEL WITHIN [illegible] DIFF WITHIN ANY 32'-0" OF ARC AND WITHIN ± 1/4" [illegible] AROUND PERIPHERY
   B. SHIMS 3"X3/4" THICK STEEL TO BE PLACED AROUND [illegible] @ 3' [illegible] BY TANK CONTRACTOR
9. ELECTRIC & CONTROLS

   ALL ELECTRIC AND WATER LEVEL TELEMETRY TO BE FURNISHED AND [illegible] BY THE TANK CONTRACTOR

   PROBES FOR WELL AND BOOSTER PUMP CONTROLS SHALL BE [illegible] TANK ELEVATION

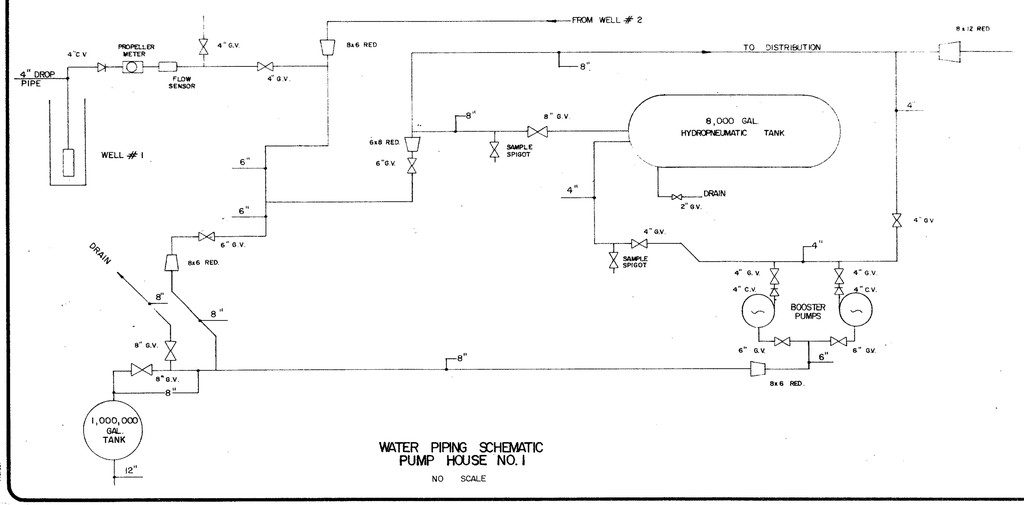

WATER PIPING SCHEMATIC
PUMP HOUSE NO. 1

NO SCALE

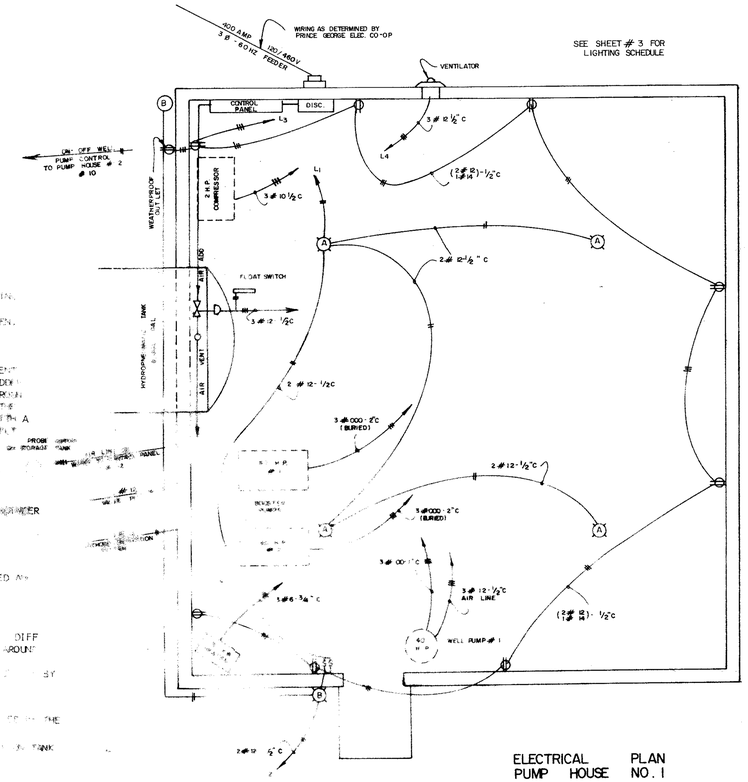

ELECTRICAL PLAN
PUMP HOUSE NO. 1

SCALE: 1/4" = 1'-0"

CHARLES C. TOWNES & ASSOCIATES
Engineers, Planners, Land Surveyors
110 Norfolk Ave., P.O. Box 97
Colonial Heights, Va. 23834
804-526-6766

COMMONWEALTH OF VIRGINIA
CHARLES E. TOWNES
CERTIFICATE No. # 10478
PROFESSIONAL ENGINEER

PRINCE GEORGE INDUSTRIAL WATER PROJECT
RIVES DISTRICT
PRINCE GEORGE COUNTY, VIRGINIA

PUMP HOUSE No. 1
SCHEMATIC and ELECTRICAL

REVISIONS	
DATE	ITEM

DATE: MAY 26, 1982
SCALE: AS SHOWN
DRAWN BY: HJM & JDJ
CHECKED BY: CET
F.B. #
SHEET # 6