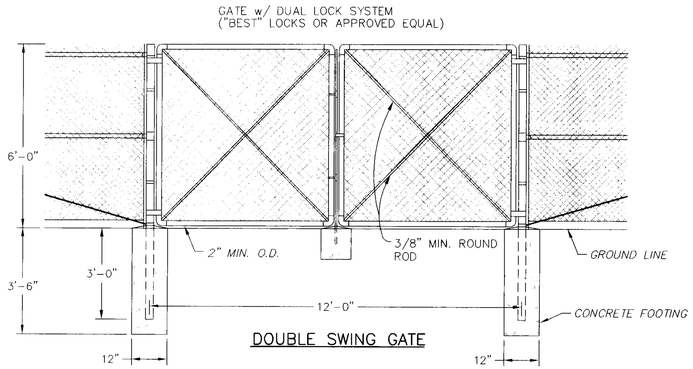

DOUBLE SWING GATE

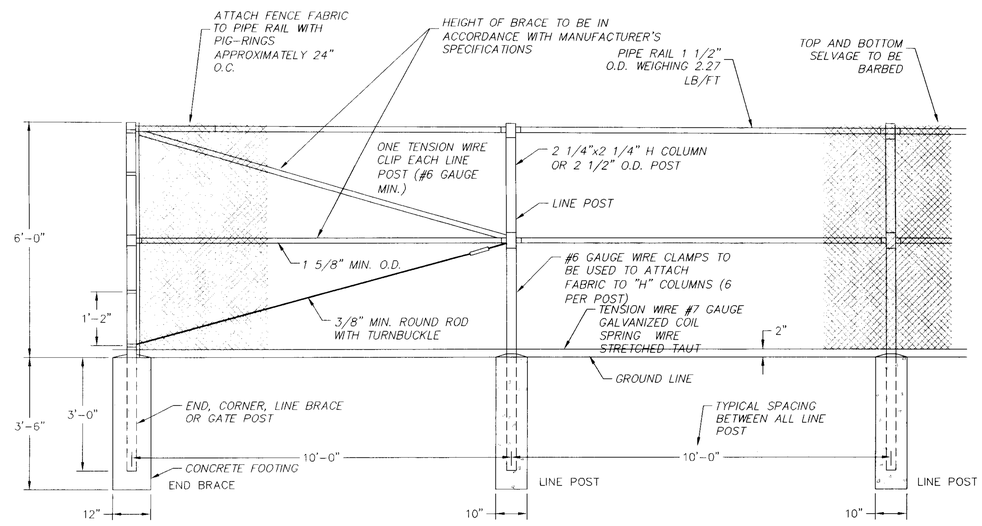

CHAIN LINK FENCE & GATE

NOT TO SCALE

C136
TG-0803

UB-1

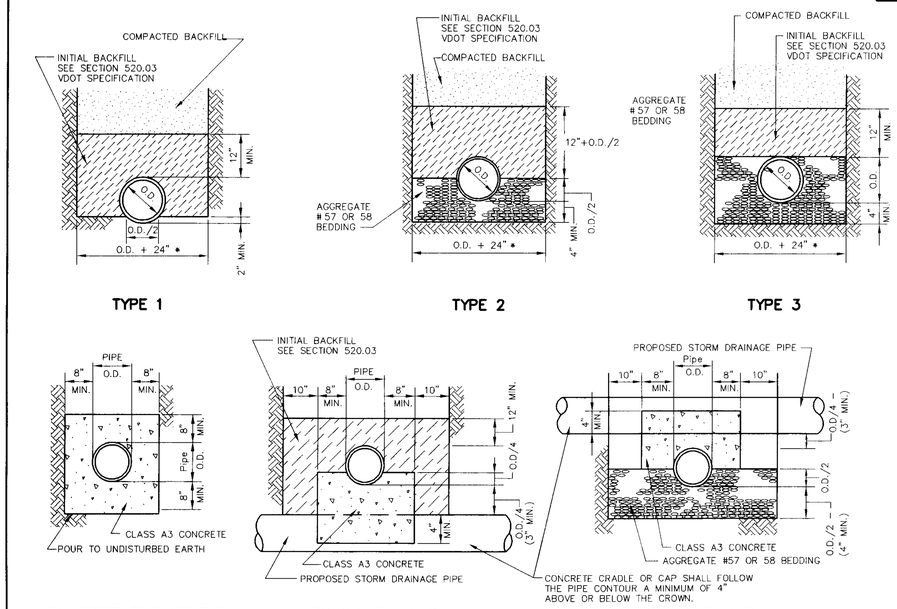

NOTES:

1. WHERE THE TRENCH BOTTOM IS IN ROCK, IT SHALL BE EXCAVATED TO A MINIMUM OF 8" BELOW THE BOTTOM OF THE PIPE AND BACKFILLED WITH BEDDING MATERIAL.
2. WHERE PIPE FOUNDATIONS ARE YIELDING, PIPE SHALL BE BEDDED ON A MINIMUM OF 8" BEDDING MATERIAL.

* FOR PIPE LESS THAN 12" THE TRENCH WIDTH MAY BE 36" MAXIMUM.

UTILITY BEDDING AND PROTECTION
WATER AND SANITARY SEWER FACILITIES

VIRGINIA DEPARTMENT OF TRANSPORTATION

1401.01

NOTES:
1. DUCTILE IRON GRAVITY SEWER PIPE USE TYPE 2.
2. DUCTILE IRON FORCE MAIN PIPE USE TYPE 1.
3. PVC SDR 35 GRAVITY SEWER PIPE USE TYPE 2.
4. PVC C-900 FORCE MAIN PIPE USE TYPE 2.
5. HDPE FORCE MAIN USE TYPE 1.
6. BACKFILL WITHIN VDOT RIGHT-OF-WAY SHALL BE 95% COMPACTION.

NOTE:
CAST IRON LID AND COVER MUST MEET H20 LOADING REQUIREMENTS.

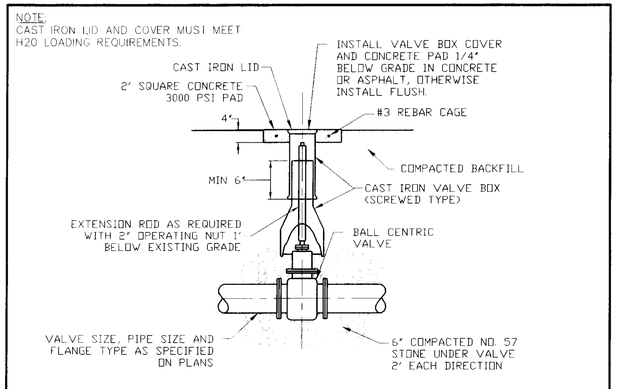

BURIED VALVE DETAIL

NOT TO SCALE

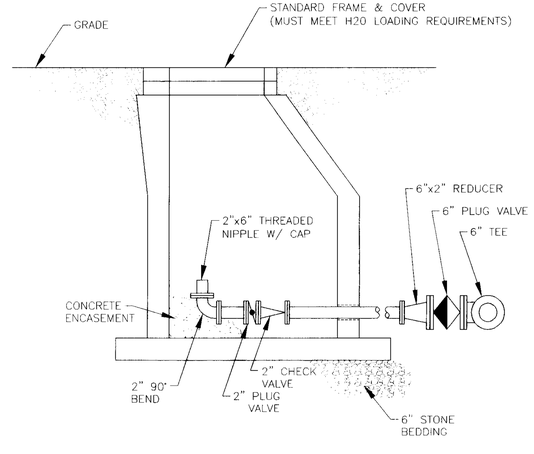

FLUSHING CONNECTION

NOT TO SCALE

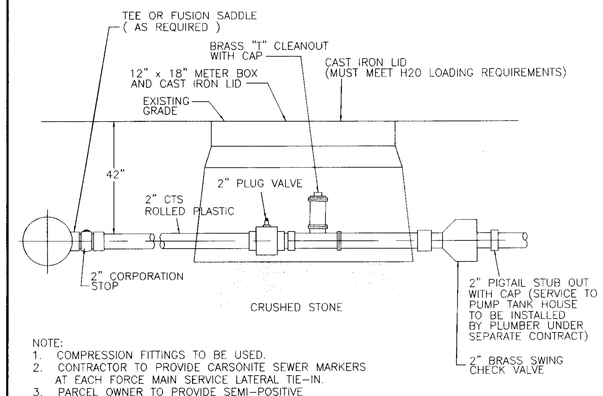

NOTE:
1. COMPRESSION FITTINGS TO BE USED.
2. CONTRACTOR TO PROVIDE CARSONITE SEWER MARKERS AT EACH FORCE MAIN SERVICE LATERAL TIE-IN.
3. PARCEL OWNER TO PROVIDE SEMI-POSITIVE DISPLACEMENT SEWAGE GRINDER PUMP PACKAGE FOR THEIR LATERAL TIE-IN. THE PUMP SHALL PROVIDE A MINIMUM OF 100 TDH AT THE TIE-IN POINT.

FORCE MAIN SERVICE LATERAL TIE-IN

NOT TO SCALE

FINAL

COMMONWEALTH OF VIRGINIA
ALFRED R. WILLIAMS
No. 032037
PROFESSIONAL ENGINEER
4/1/08

THIS DRAWING PREPARED AT THE
CORPORATE OFFICE
1001 Boulders Parkway, Suite 300 | Richmond, VA 23225
TEL 804.200.6500 FAX 804.560.1016 www.timmons.com

YOUR VISION ACHIEVED THROUGH OURS.

Site Development | Residential | Infrastructure | Technology

REVISION DESCRIPTION	DATE

DATE	1/4/08
DRAWN BY	M. ROBESON
DESIGNED BY	T. ADAMS
CHECKED BY	T. DILEGO
SCALE	AS SHOWN

TIMMONS GROUP

NORTH ELEMENTARY SCHOOL PUMPING STATION & FORCE MAIN

PRINCE GEORGE COUNTY, VIRGINIA

TYPICAL DETAILS

JOB NO.	24326
SHEET NO.	U1.5

These plans and associated documents are the exclusive property of TIMMONS GROUP and may not be reproduced in whole or in part and may not be used for any purpose whatsoever, including but not limited to construction, bidding and/or construction staking without the express written consent of TIMMONS GROUP.

L:\DDN\24326_PRINCE GEORGE ELEMENTARY\DWG\Sheet\CD\Forcemain\24326-U1.3-U1.8.dwg | Plotted on 4/9/2008 10:18 AM by Todd Kilduff