SANITARY SEWER IMPROVEMENTS

MANCHESTER MILL & NEWSTEAD FARMS

BLAND DISTRICT

PRINCE GEORGE CO., VIRGINIA

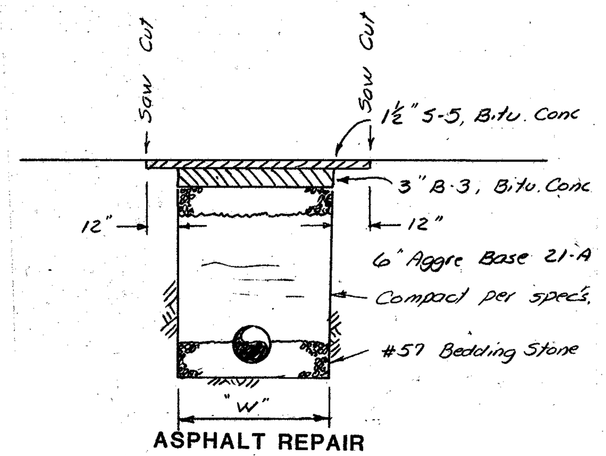

ASPHALT REPAIR

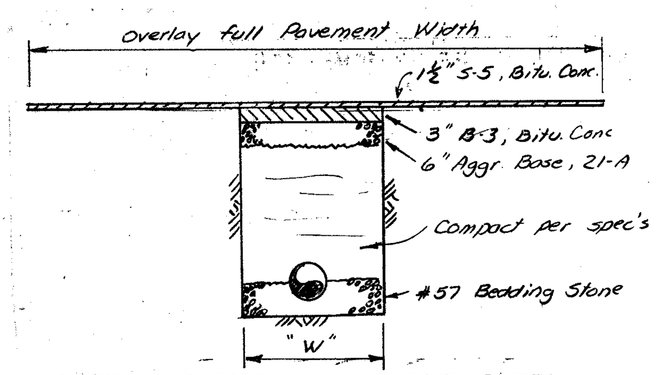

ASPHALT REPAIR W/ FULL WIDTH OVERLAY

Where Required shown by

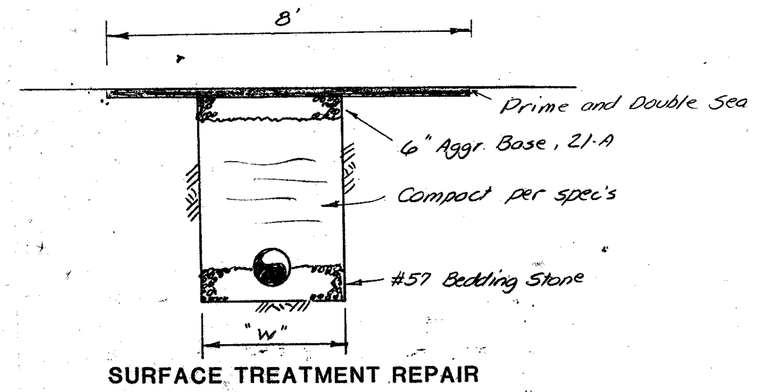

SURFACE TREATMENT REPAIR

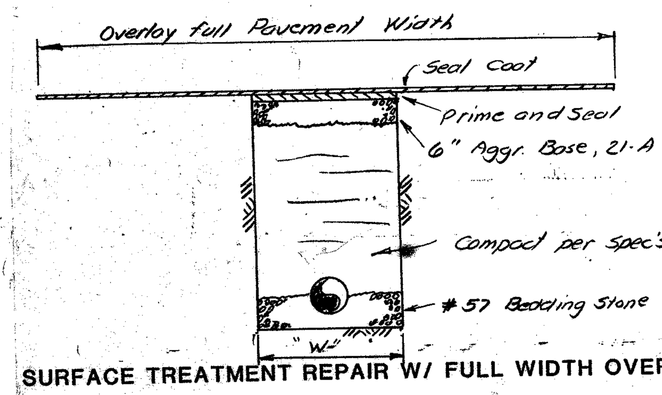

SURFACE TREATMENT REPAIR W/ FULL WIDTH OVERLAY

Where Required shown by

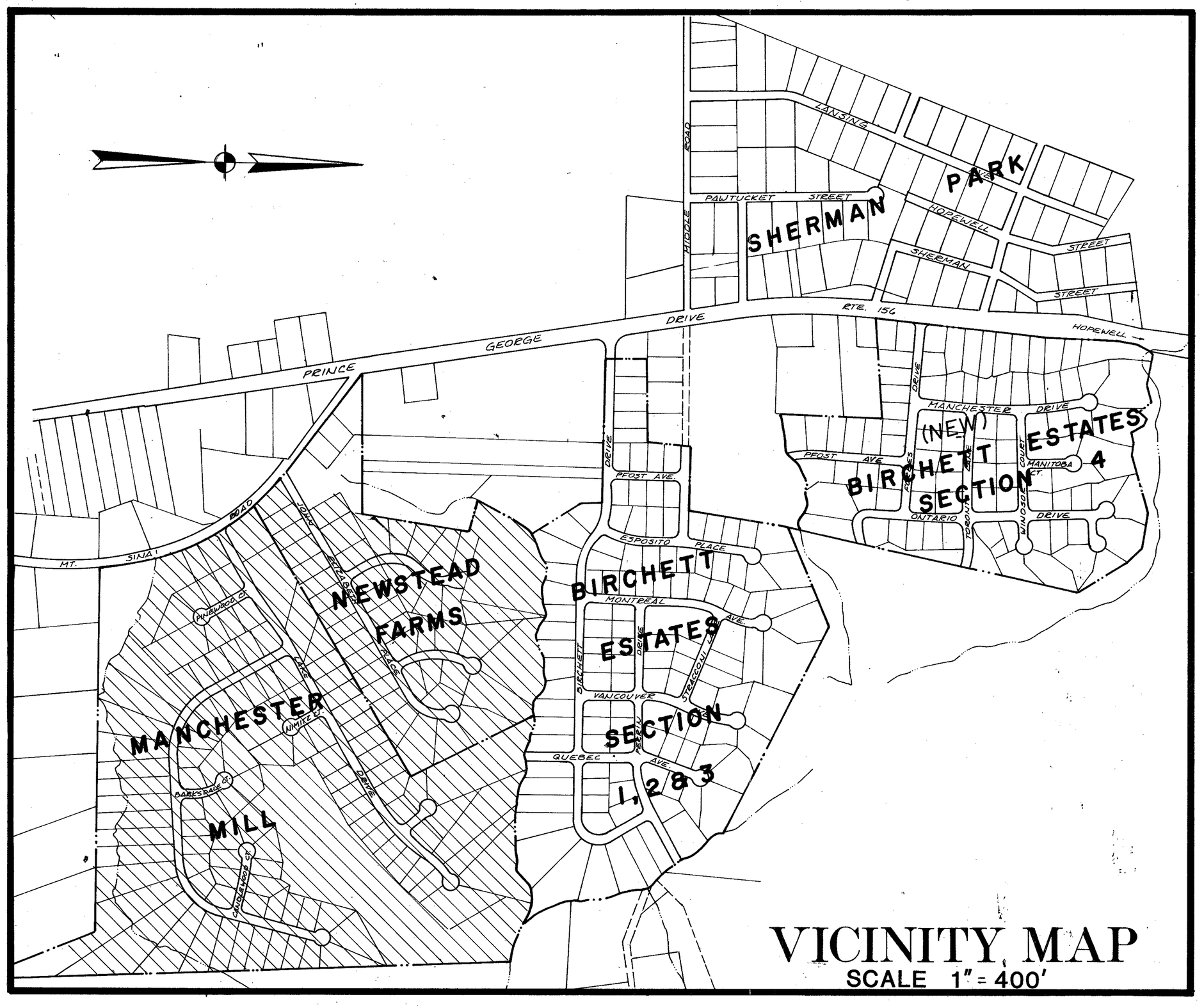

VICINITY MAP

SCALE 1" = 400'

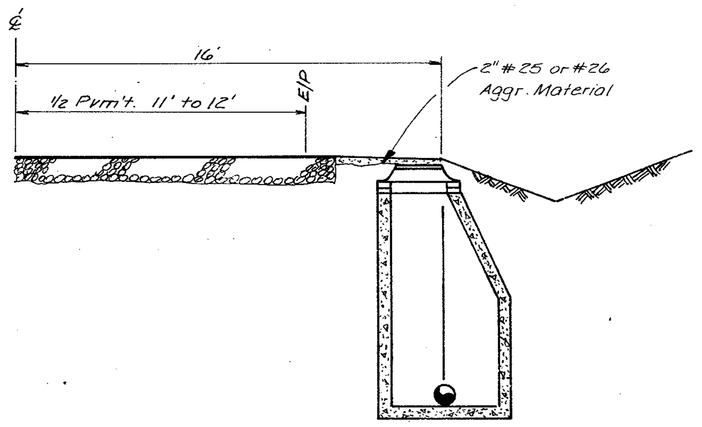

TYPICAL MANHOLE LOCATION

Note: Unless shown otherwise on plan-profile drawings

INDEX

SHEET NO.	DESCRIPTION
1	COVER SHEET
2	OVERALL PROJECT
3	OVERALL PROJECT
4	ROYSTER PLACE OUTFALL
5	NEWSTEAD PLACE OUTFALL
6	NEWSTEAD FARMS COLLECTOR SYSTEM
7	SPRING LAKE & MARTINSON OUTFALL
8	MANCHESTER MILL COLLECTOR SYSTEM
9	MANCHESTER MILL COLLECTOR SYSTEM
10	MANCHESTER MILL COLLECTOR SYSTEM

Rev 6-1-85
Rev 3-7-86 VDH/T Changes

J. K. TIMMONS & ASSOCIATES INC.

ENGINEERS - SURVEYORS - PLANNERS

411 E. BROADWAY

HOPEWELL, VIRGINIA

458 - 8685

AS BUILT