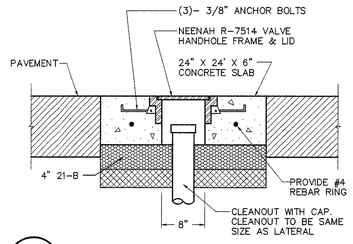

7 / C8 C11 **CLEANOUT IN PAVED AREA**
NO SCALE

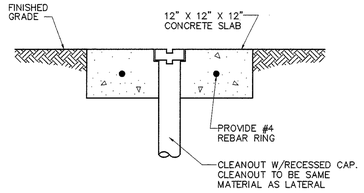

8 / C8 C11 **CLEANOUT IN GRASSED AREA**
NO SCALE

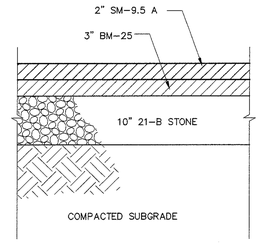

9 / C8 C11 **TYPICAL HEAVY DUTY ASPHALT (DRIVE AISLES)**
NOT TO SCALE

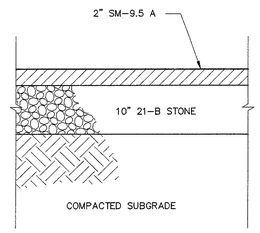

10 / C8 C11 **TYPICAL REGULAR DUTY ASPHALT (PARKING SPACES)**
NOT TO SCALE

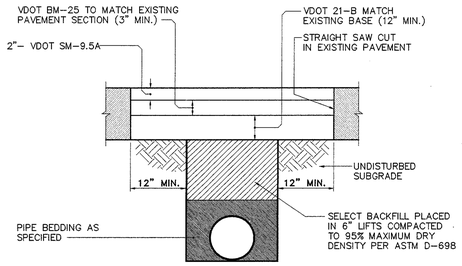

11 / C8 C11 **PAVEMENT REPAIR DETAIL**
NO SCALE

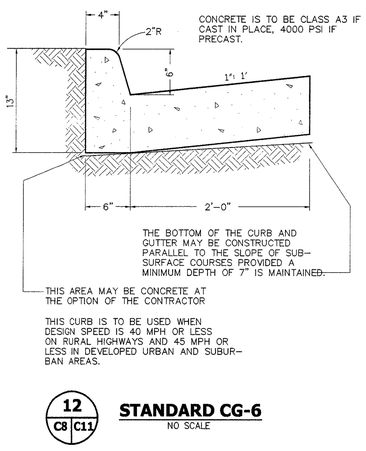

12 / C8 C11 **STANDARD CG-6**
NO SCALE

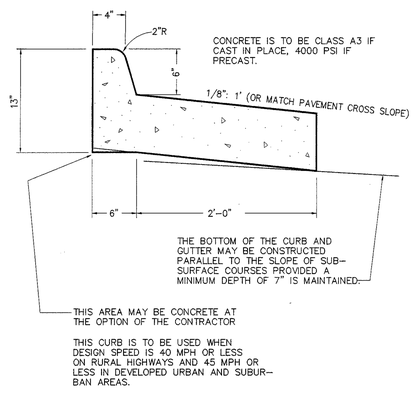

13 / C8 C11 **REVERSE CURB & GUTTER (CG-6R)**
NO SCALE

NOTES: 1) CONTRACTION JOINTS TO BE AT 6' O.C.
2) EXPANSION JOINTS TO BE AT ALL CHANGES IN DIRECTION AND AT 30' O.C. MAXIMUM.

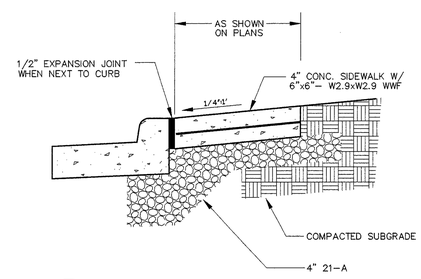

14 / C8 C11 **TYPICAL SIDEWALK DETAIL**
NO SCALE

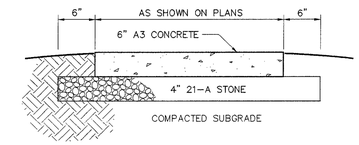

NOTES: 1. TRANSVERSE EXPANSION JOINTS ARE TO BE PLACED A MAXIMUM OF 30' ON CENTER.
2. TRANSVERSE CONTROL JOINTS ARE TO BE PLACED AT 5' ON CENTER BETWEEN EXPANSION JOINTS.
3. LONGITUDINAL JOINTS ARE REQUIRED FOR SIDEWALKS WITH WIDTHS GREATER THAN 10'. LONGITUDINAL JOINTS SHALL BE PLACED AT EQUAL INTERVALS NOT TO EXCEED 10' IN WIDTH.

15 / C8 C11 **TYPICAL SIDEWALK SECTION**
NO SCALE

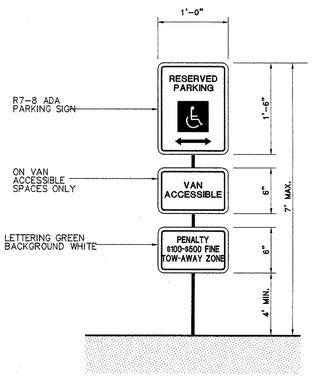

16 / C8 C11 **ADA VAN ACCESSIBLE SIGN**
NO SCALE

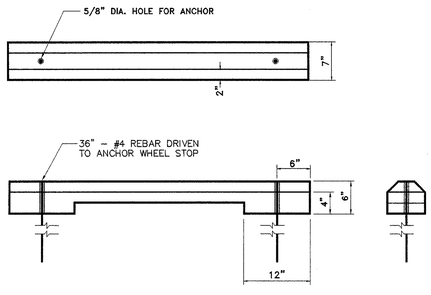

17 / C8 C11 **WHEEL STOP DETAIL**
NO SCALE

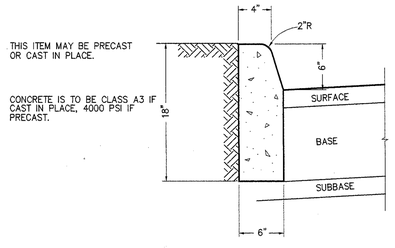

THE DEPTH OF CURB MAY BE REDUCED AS MUCH AS 3" (15" DEPTH) OR INCREASED AS MUCH AS 3" (21" DEPTH) IN ORDER THAT THE BOTTOM OF CURB WILL COINCIDE WITH THE TOP OF A COURSE OF THE PAVEMENT SUBSTRUCTURE. OTHERWISE THE DEPTH IS TO BE 18" AS SHOWN.

18 / C8 C11 **STANDARD CG-2**
NO SCALE

NOTE: MINIMUM DISTANCE BETWEEN HYDRANT AND FACE OF CURB SHALL BE 24 INCHES. (WHERE APPLICABLE)

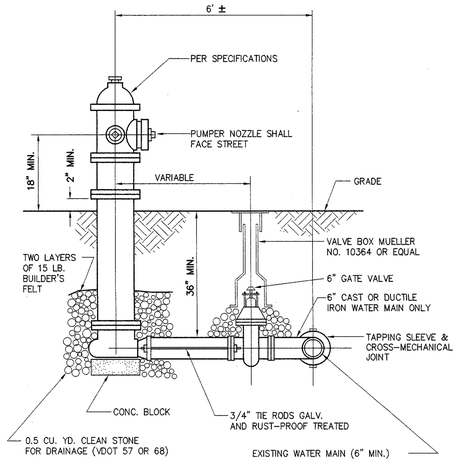

19 / C8 C11 **FIRE HYDRANT ASSEMBLY**
NO SCALE

Draper Aden Associates
Engineering • Surveying • Environmental Services
8090 Villa Park Drive
Richmond, VA 23228
804-264-2228 Fax: 804-264-8773
Blacksburg, VA
Charlottesville, VA
Raleigh-Durham, NC

COMMONWEALTH OF VIRGINIA
CHRISTOPHER M. SHUST
No. 034028
12/20/02
PROFESSIONAL ENGINEER

HVC • CHENAULT
hening • vest • covey • chenault architectural corporation
richmond
architecture • planning • interior design
virginia

NEW COUNTY OFFICE BUILDING
PRINCE GEORGE COUNTY
PRINCE GEORGE, VIRGINIA

com. no.:	4040
drawn by:	SEK
checked by:	CMS
date:	10/01/01
revisions:	12/06/01
	5/15/02
BID:	09/09/02
	11/04/02
	12/20/02

DETAILS

C11