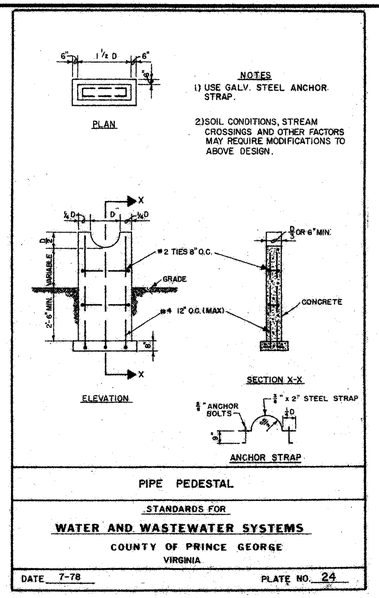

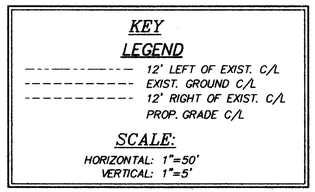

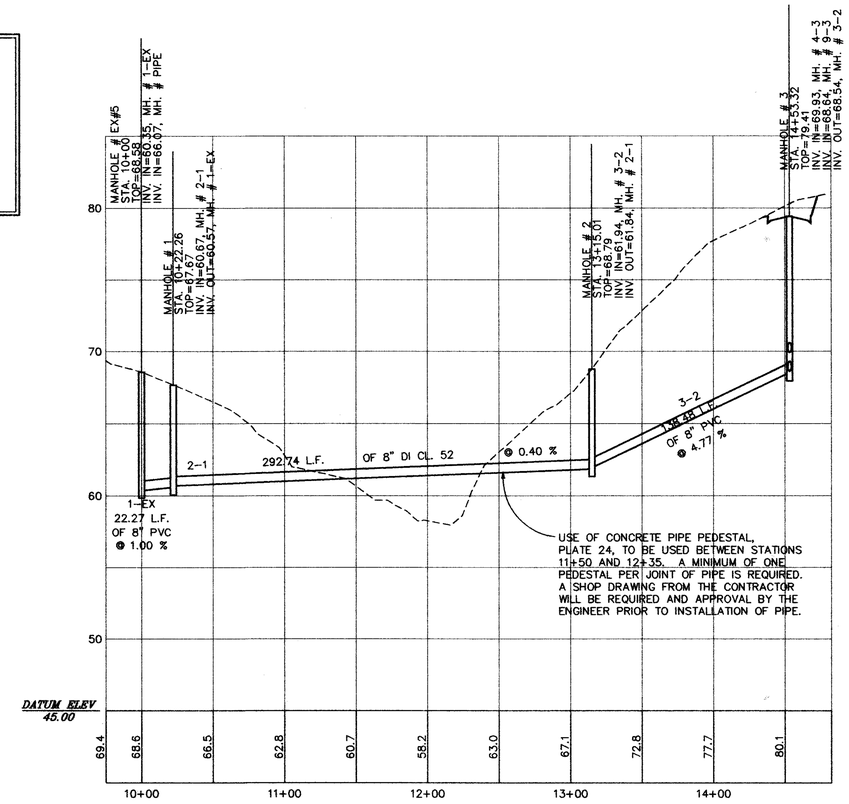

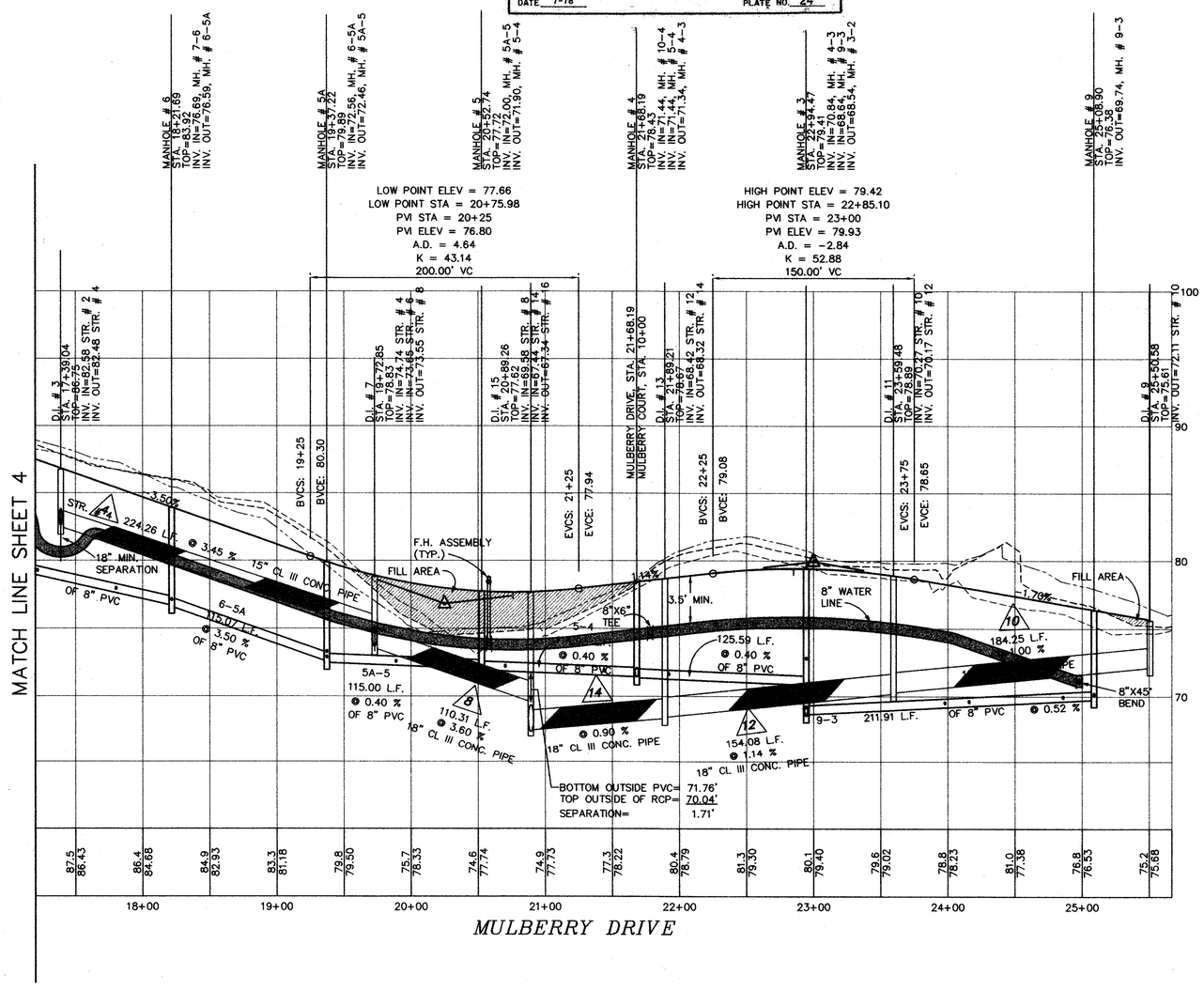

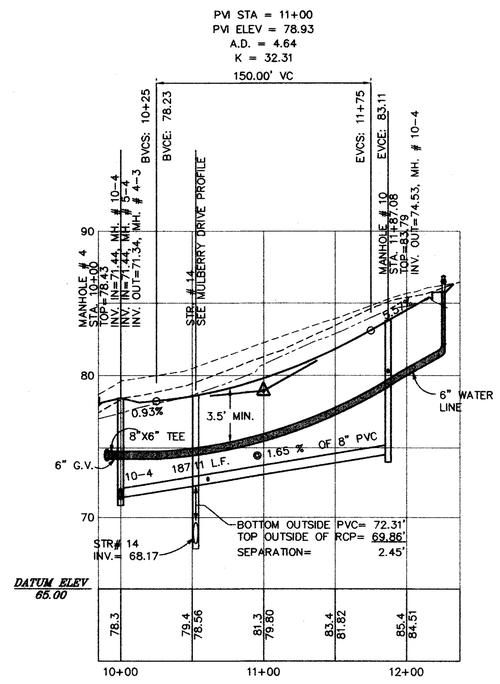

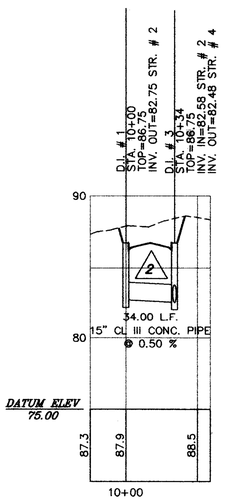

FINAL

THIS DRAWING PREPARED AT THE PRINCE GEORGE COUNTY OFFICE

COMMONWEALTH OF VIRGINIA
DERRICK A. JOHNSON
No. 24761
7-7-99
PROFESSIONAL ENGINEER

DATE	REVISION DESCRIPTION
5-19-99	COUNTY COMMENTS
7-2-99	VDOT COMMENTS

DATE	FEB. 24, 1999
DRAWN BY	S. BROOKS
DESIGNED BY	S. BROOKS
CHECKED BY	D. JOHNSON
SCALE	

PRINCE GEORGE COUNTY OFFICE
DESIGNED BY: D.A. JOHNSON
PRINCE GEORGE, VA 23875-1455
Telephone: 804-458-8685
Fax: 804-291-0788
e-mail: timmons@timmons.com

CORPORATE OFFICE
7116 W. TUCKAHOE ROAD
RICHMOND, VA 23226-4099
Telephone: 804-794-3500
Web Site: www.timmons.com

OTHER BRANCH OFFICES
Henrico County, VA • 804-262-7396
Hanover County, VA • 804-798-9500
Fredericksburg, VA • 540-891-4010
Kernersville, NC • 336-996-3598

TIMMONS
Founded 1953
ENGINEERS * SURVEYORS * PLANNERS * LANDSCAPE ARCHITECTS * ENVIRONMENTAL SCIENTISTS * GEOGRAPHIC INFORMATION SYSTEMS CONSULTANTS * CONSTRUCTION MANAGERS

MULBERRY WOODS

BLAND DISTRICT • PRINCE GEORGE, VIRGINIA

PROFILES

These plans and associated documents are the exclusive property of TIMMONS and may not be reproduced in whole or in part and shall not be used for any purpose whatsoever, inclusive, but not limited to construction, bidding, and/or construction staking without the express written consent of TIMMONS.

JOB NO. 18335

SHEET NO. 5

K:\DRAW\18335-MulberryWoods\18335-4.dwg Wed Jul 07 10:17:13 1999 SRB, TRI-CITIES OFFICE