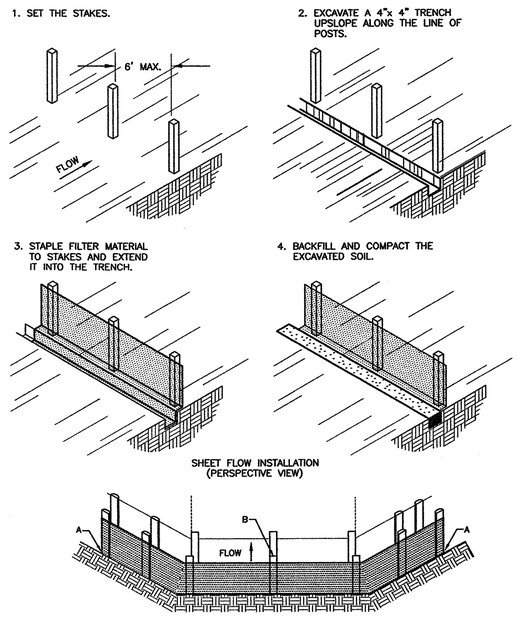

SF SILT FENCE
NOT TO SCALE

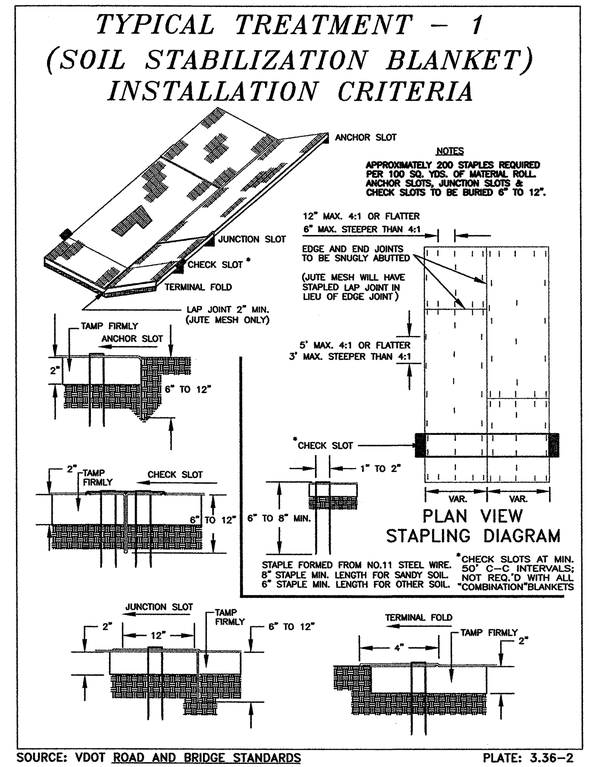

SOURCE: VDOT ROAD AND BRIDGE STANDARDS PLATE: 3.36–2

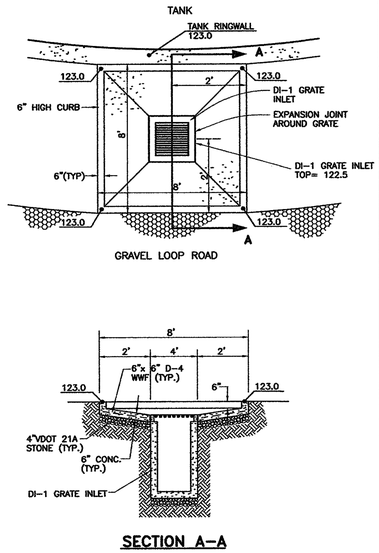

SECTION A–A

OVERFLOW SPLASH PAD
NOT TO SCALE

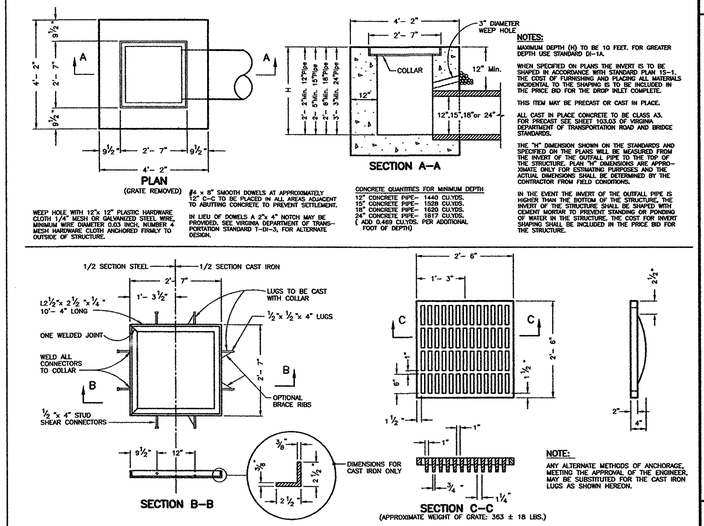

VDOT STANDARD DI–1
NOT TO SCALE

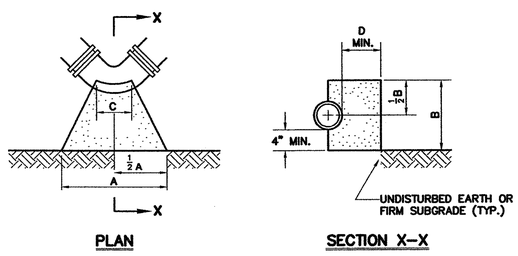

NOTE: INSTALL TWO LAYERS OF 15 LB. BUILDER'S FELT OR TWO LAYERS OF 6 MIL. POLYETHYLENE BETWEEN CONCRETE AND FITTING.

PIPE DIA.	45° BEND					90° BEND				
	A	B	C	D	E	A	B	C	D	E
3"	9"	12"	6"	6"	4"	12"	12"	6"	12"	6"
4"	9"	12"	6"	6"	4"	16"	12"	6"	12"	6"
6"	12"	14"	6"	8"	4"	21"	14"	6"	18"	6"
8"	18"	16"	8"	9"	6"	30"	16"	8"	18"	9"
10"	24"	18"	8"	10"	6"	36"	24"	10"	18"	9"
12"	30"	20"	12"	12"	9"	48"	24"	12"	18"	12"
16"	42"	30"	12"	15"	9"	60"	30"	16"	21"	12"
20"	56"	30"	12"	16"	16"	72"	40"	20"	21"	24"
24"	60"	36"	12"	21"	24"	84"	48"	24"	24"	30"
30"	72"	48"	16"	27"	24"	108"	60"	30"	24"	36"

BASED ON NORMAL OPERATING PRESSURE UP TO 150 PSI

E = ADDITIONAL LENGTH TO BE ADDED TO DIMENSION A FOR EACH ADDITIONAL 50 PSI PRESSURE UP TO 300 PSI

THRUST BLOCK DETAILS
(45° – 90° BENDS)
NOT TO SCALE

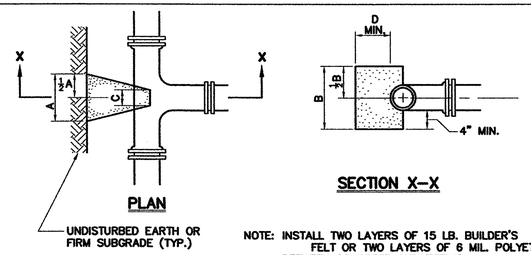

NOTE: INSTALL TWO LAYERS OF 15 LB. BUILDER'S FELT OR TWO LAYERS OF 6 MIL. POLYETHYLENE BETWEEN CONCRETE AND FITTING.

TEE	BRANCH DIAMETER									
	3"	4"	6"	8"	10"	12"	16"	20"	24"	30"
A	12"	12"	16"	18"	26"	30"	40"	48"	60"	80"
B	12"	16"	20"	30"	32"	42"	56"	72"	80"	96"
C	8"	8"	12"	12"	12"	12"	16"	24"	24"	24"
D	6"	6"	8"	9"	10"	12"	14"	18"	20"	24"

BASED ON NORMAL OPERATING PRESSURE UP TO 150 PSI

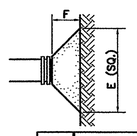

NOTE: INSTALL TWO LAYERS OF 15 LB. BUILDER'S FELT OR TWO LAYERS OF 6 MIL. POLYETHYLENE BETWEEN CONCRETE AND FITTING.

PLUG	PIPE DIAMETER									
	3"	4"	6"	8"	10"	12"	16"	20"	24"	30"
E	14"	16"	21"	29"	36"	41"	54"	64"	75"	88"
F	8"	8"	10"	10"	12"	14"	16"	18"	20"	24"

BASED ON NORMAL OPERATING PRESSURE UP TO 150 PSI

THRUST BLOCK DETAILS
(TEES, TAPPING SLEEVES, PLUGS & CAPS)
NOT TO SCALE

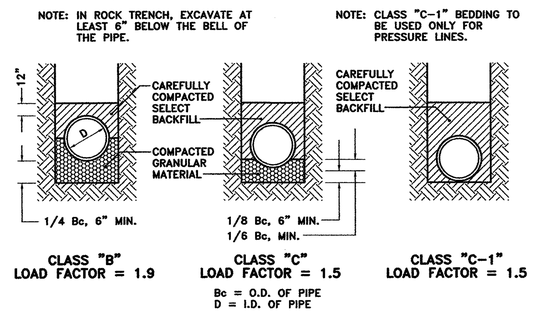

BEDDING DETAIL
NOT TO SCALE

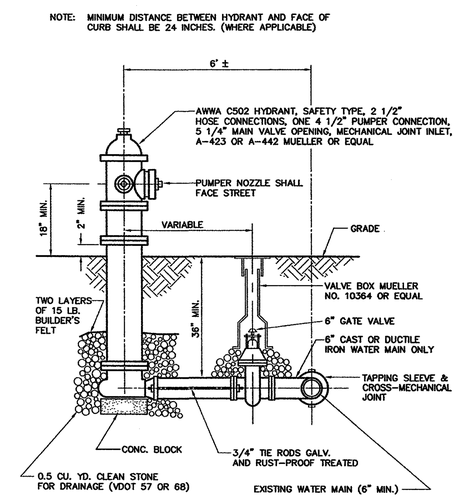

FIRE HYDRANT ASSEMBLY
NOT TO SCALE

COMMONWEALTH OF VIRGINIA
JEFFREY P. KAPINOS
CERTIFICATE No. 21876
8/5/01
CERTIFIED PROFESSIONAL ENGINEER

Draper Aden Associates
Engineering • Surveying • Environmental Services
Blacksburg, VA 2206 South Main Street Blacksburg, VA 24060 540-552-0444 Fax: 540-552-0291
Richmond, VA 8090 Villa Park Drive Richmond, VA 23228 804-264-2701 Fax: 804-264-8773 www.dae.com
Raleigh-Durham, NC 2821 Schelhein Road, Suite 108 Apex, NC 27502 919-387-9997 Fax: 919-387-9994

MISCELLANEOUS DETAILS
MIDDLE ROAD WATER STORAGE TANK
PRINCE GEORGE COUNTY, VIRGINIA

REVISIONS

DESIGNED BY:	AQN
DRAWN BY:	AQN
CHECKED BY:	JPK
SCALE:	AS SHOWN
DATE:	03-07-01
PROJECT NUMBER:	R00610-02F

R00610-02A