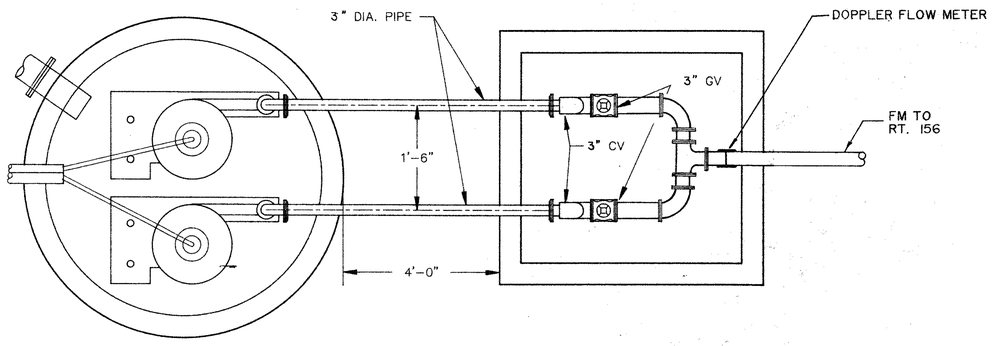

PLAN

NTS

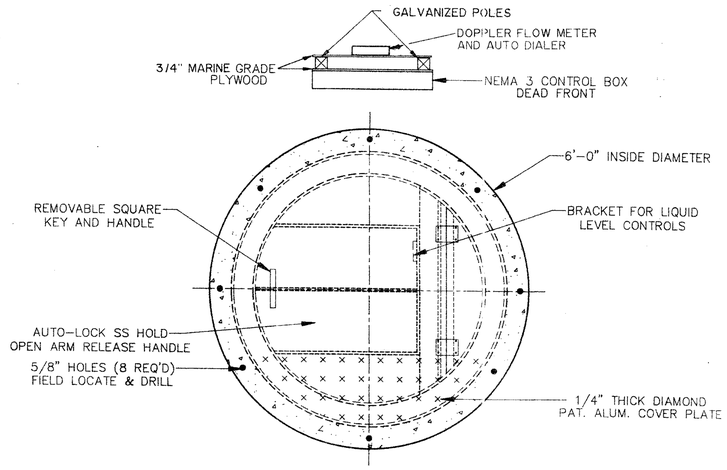

TOP VIEW

NTS

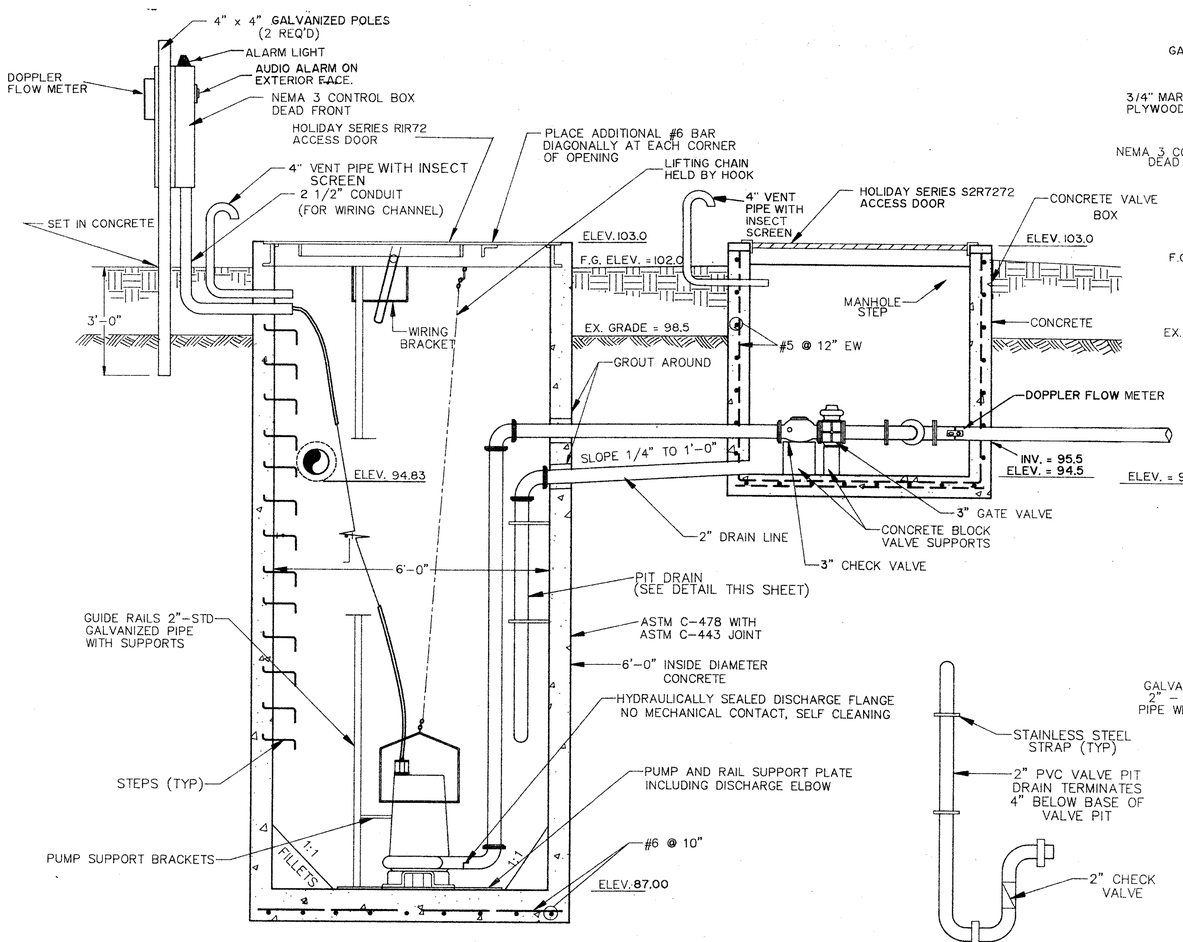

SIDE SECTION

NTS

PIT DRAIN DETAIL

NTS

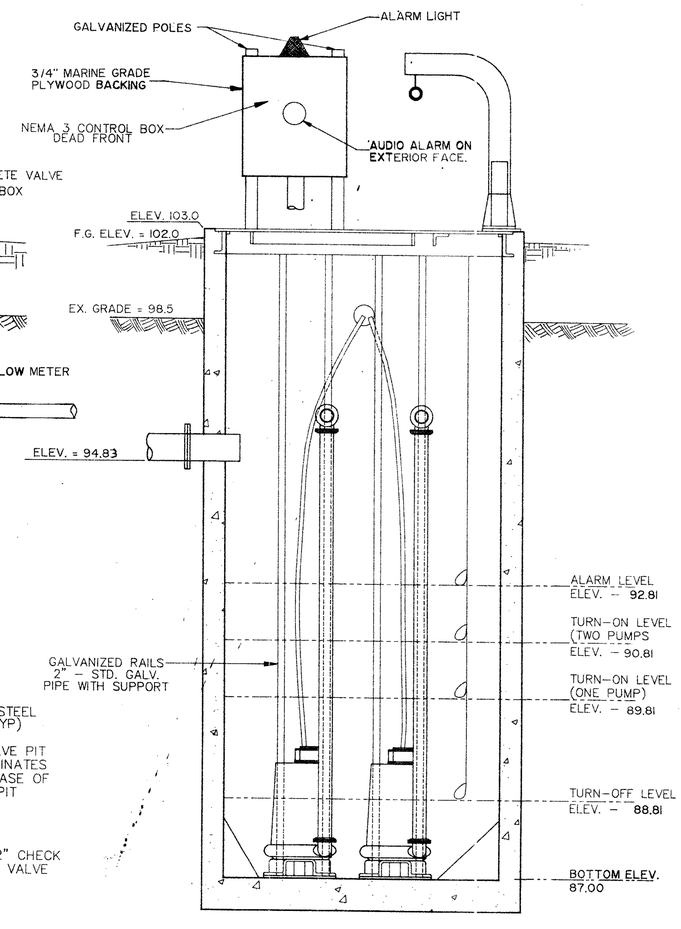

END SECTION

NTS

FINAL

Rickmond Engineering, Inc.
Civil Engineering
Environmental Engineering
Land Development Planning
1643-C Merrimac Trail
Williamsburg, VA 23185
(804)229-1776 or 875-1785

Designed By:	Drawn By:	Approved By:	Scale:	Date:	Job No.:
DCR	DPB	DCR	NTS	3-31-92	91308

COMMONWEALTH OF VIRGINIA
KENNETH W. BARBUTT
No. 022657
PROFESSIONAL ENGINEER

No.	By	Revision	Date	App.
2	RJH	REVISED PER VDH AND COUNTY COMMENTS	7.29.95	TVP
1	RJH	VDH AND COUNTY ENGINEER COMMENTS 11/30/95	12.5.95	TVP

MANNINGS MOBILE HOME PARK

PUMP STATION DETAIL

PRINCE GEORGE COUNTY VIRGINIA

Job Number	Sheet No.
95221	C4